esi

work gear

January 2019 Catalog | Volume 31

Fellowes Brands. | FAMILY BUSINESS SINCE 1917

Contents

INTRO 2
- ESI/Fellowes Brands 2
- Who we are 3
- ESI gives back 4
- New products spotlight 6
- Sustainability 8
- ESI for government 8
- Service features 9

MONITOR ARMS 10
- Monitor arm considerations 12
- Motion arm movement 13
- Eppa™ series 14
- Eppa 16
- Eppa2 17
- Edge® series 18
- Edge 20
- Edge2 21
- Edge2-MS 22
- Edge2-Max 23
- Edge-Max 24
- Edge-Max-Dual 25
- Edge-Wall 26
- Edge-Slat 27
- Edge series product comparison 28
- Evolve series 31
- Evolve1 32
- Evolve2 36
- Evolve3 40
- Evolve4 42
- Evolve6 44
- Evolve series product comparison 47
- Kata series™ 54
- Kata 56
- Kata2 57
- Kata2-MS 58
- Kata series product comparison 59
- Monitor arm accessories 60
- Benching mounts 61

LAPTOP SOLUTIONS 62
- Tech Dock 63
- LTH-Edge 65
- Edge2Combo 65
- Evolve2Combo 66
- Evolve3Combo 66

HEIGHT ADJUSTABLE TABLES 67
- Triumph-LX™ 68
- Victory-LX™ 2-leg 70
- Victory-LX 3-leg 72
- All-Flex® 2-leg 76
- All-Flex 3-leg 78
- Electric table base product comparison 82
- Espree™ 84
- Weight Adjustable Espree™ 86
- Q Crank 88
- Manual table base product comparison 90
- Worksurfaces 92
- Centro™ 97
- Birdi™ 99
- Table accessories 100

DESKTOP SIT-TO-STAND WORKSTATIONS 102
- S2S 103
- Climb 104
- Climb2 105
- Sit-to-stand product comparison 106

POWER SOLUTIONS 107
- Railway™ 108
- FlexCharge4™ 112
- FlexCharge9™ 113

KEYBOARD SOLUTIONS 114
- Solution Ultra 115
- Solution All-Fit 115
- Keyboard combo solutions product comparison 116
- Keyboard platforms 119
- Articulating arms product comparison 122
- Keyboard accessories 125

LIGHTING 126
- Pixie series 127
- Vivid series 128
- Lustre 129
- Task lights product comparison 130
- Fluorescent lights 133
- Lucera series 134
- G2 series 135
- Under cabinet lights product comparison 136

WALL-MOUNTED WORK GEAR 138
- Titan series 139

MOBILE WORK GEAR 140
- WOW series 141
- Mobile accessories 142

LEVEL CERTIFIED PRODUCT INDEX 143

TERMS AND CONDITIONS 144

Joined in 2017, Fellowes Brands and ESI create a team of people dedicated to offering the best office products and contract office furniture. ESI customers will continue to experience ESI's customer service and will now have the advantage of the expansive international equity and reach of the 100-year historic Fellowes brand. Together, we have a single goal, to help professionals to be the best they can be. More productive. More efficient. Happier. Healthier.

Fellowes' vision of providing the best and most innovative wellness products for the workplace was expanded through ESI's broad portfolio of work gear for enhancing worker comfort, productivity, and wellness in the contract furniture market. Fellowes' award-winning design and engineering team, builds on ESI's successful capabilities, creating the opportunity for greater innovation and a diverse and versatile product portfolio.

The combined strength of ESI and Fellowes Brands also comes from an alignment of consistent company values and the shared experience of being family businesses. Fellowes' core values are steeped in the character of the company's founder, Harry Fellowes, who established a value-based culture at Fellowes in 1917.

Our organizations have united our entrepreneurial spirits with a singular focus—to bring superior quality, performance, and exceptional customer experience for professionals worldwide. With a diverse range of products from Fellowes' business machines, storage solutions, and air treatment technology—and ESI's contract office furniture and work gear, our focus continues to make professionals more productive and enable them to dominate their day.

Fellowes Brands

Storage solutions for business, home organization and moving

High performance machines for home and professional use

Business machines and solutions for workplace wellness and organization

Mobile phone and tablet accessories for protection and functionality

Who we are

At ESI, we design products for the movers and shakers of this world—work gear that keeps you active, healthy, focused, productive, and engaged, every single day. The pace of business is faster than ever, but we're here to propel you forward at work, at home, and in between.

Geared for today's fast-paced lifestyle, our extensive catalog of work gear will empower you to be energized and productive.

esi gives back

Our corporate commitment to our community drives us to give our time, talent, and resources to those in need. Each year, ESI supports a variety of local philanthropic activities with product donations, financial gifts, and company-wide volunteer efforts. When we all lend a hand, we create momentum to make our community a better place.

As a Fellowes brand, ESI supports community and culture through philanthropy. Fellowes Brands has established the GIVE™ program, which is dedicated

to building local and global partnerships which address humanity's greatest needs. The programs' guiding principles align with our strong values as a company and are the hearts of our people. GIVE is committed to supporting initiatives in four key areas: social services, world aid and development, education and cancer research. We are honored to work as a team in building strong communities, improving lives, and providing a better tomorrow for our world today.

GIVE™

New products spotlight

Kata™

Single and dual monitor arm

See pages 56–57 for more details

Kata2-MS

Dual monitor arm
Available Summer 2019

See pages 58 for more details

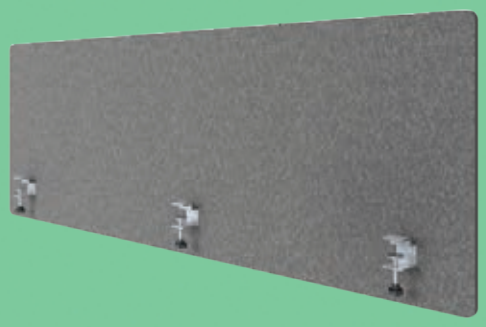

Centro™

Privacy/Modesty screen

See pages 97 for more details

Birdi™

Height adjustable perching stool

See pages 99 for more details

Railway™

Power and data solution

See pages 108 for more details

FlexCharge4™

Personal desktop power

Now in black

See pages 112 for more details

FlexCharge9™

Desktop power pod

Now in black

See pages 113 for more details

Sustainability

Sustain and strengthen our environment with ESI. Our company is dedicated to selecting products and adopting forward-thinking procedures that support sustainability. We consider people and our planet with everything we do—from selecting product materials, to recycling programs and our facility operations. When you choose ESI, you are choosing to support our proactive approach to creating quality work gear that also works for the environment.

Spare parts recycling

ESI's Edge and Evolve series of monitor arms are shipped with both a desk clamp and grommet mount included–making them simple to order and install. After the installation is complete, the unused desk clamp or grommet mount can be sent back to ESI at no cost to you. ESI will then properly dispose of or recycle the parts as appropriate. Our Spare Parts Recycling Program prevents leftover parts from taking up space in your facility or in a landfill. Contact our Customer Service Department to participate.

LEVEL certification

LEVEL was created to deliver the most open and transparent means of evaluating and communicating the environmental and social impacts of furniture products in the built environment. To put it simply, LEVEL is to commercial furniture as LEED is to buildings. Also like LEED, LEVEL is comprehensive. It addresses criteria across corporate, facility and product impacts in a way that few other certifications do. If you see a level certified product, you can be assured that every part of the process from manufacture to delivery has been tested to ensure that you are getting quality products made safely and ethically, with a minimal environmental footprint.

Source: http://www.levelcertified.org/learn-about-level/
See page 143 for a complete list of ESI's level certified products.

Government

ESI is proud to provide ergonomic work gear to federal, state, and local governments.

Visit esiergo.com for a complete list of our government contracts and Cooperative Purchasing Agreements. Or contact our Customer Service Department.

The products available through GSA are designated as GSA

GSA Schedule
Contract GS-28F-0028Y

Important Federal government numbers

CONTRACT: GS-28F-0028Y

FSC GROUP 71 Office Furniture

SIN 711-2: Worksurfaces, workstations, computer furniture and accessories

SIN 711-11: Tables and accessories

Duns: 005070008

CAGE: 63090

Tax ID Number (TIN): 36-0770670

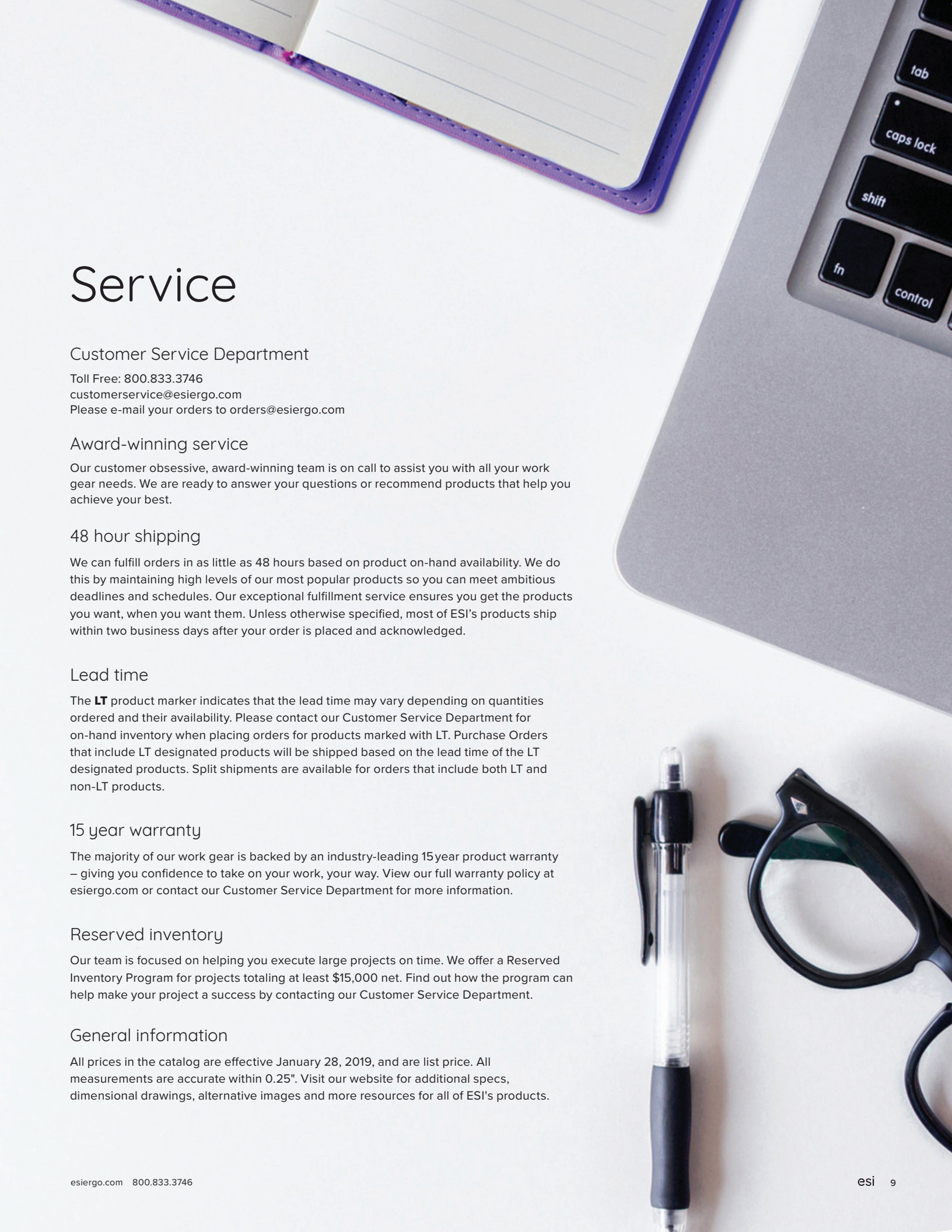

Service

Customer Service Department

Toll Free: 800.833.3746
customerservice@esiergo.com
Please e-mail your orders to orders@esiergo.com

Award-winning service

Our customer obsessive, award-winning team is on call to assist you with all your work gear needs. We are ready to answer your questions or recommend products that help you achieve your best.

48 hour shipping

We can fulfill orders in as little as 48 hours based on product on-hand availability. We do this by maintaining high levels of our most popular products so you can meet ambitious deadlines and schedules. Our exceptional fulfillment service ensures you get the products you want, when you want them. Unless otherwise specified, most of ESI's products ship within two business days after your order is placed and acknowledged.

Lead time

The **LT** product marker indicates that the lead time may vary depending on quantities ordered and their availability. Please contact our Customer Service Department for on-hand inventory when placing orders for products marked with LT. Purchase Orders that include LT designated products will be shipped based on the lead time of the LT designated products. Split shipments are available for orders that include both LT and non-LT products.

15 year warranty

The majority of our work gear is backed by an industry-leading 15 year product warranty – giving you confidence to take on your work, your way. View our full warranty policy at esiergo.com or contact our Customer Service Department for more information.

Reserved inventory

Our team is focused on helping you execute large projects on time. We offer a Reserved Inventory Program for projects totaling at least $15,000 net. Find out how the program can help make your project a success by contacting our Customer Service Department.

General information

All prices in the catalog are effective January 28, 2019, and are list price. All measurements are accurate within 0.25". Visit our website for additional specs, dimensional drawings, alternative images and more resources for all of ESI's products.

Monitor arms

Set your screens for success

Adaptable for any workspace, flexible monitor arms can optimize your desk space and increase your productivity. Easily adjust up to six monitors to maximize comfort and efficiency. Configurations grow with you, so your monitors will keep pace with your creativity.

Product shown: Edge2-MS, Lustre, FlexCharge4

Product shown: Evolve2-FMS, Victory-LX, Solution 2, FlexCharge4, Vivid-LEX, Centro

What to consider when selecting a monitor arm

Number of monitors

ESI offers solutions for as few as one to as many as six monitors. Should the needs of the user change, the Evolve series can easily be modified in the field to accommodate additional monitors and changing work environments.

Height adjustment

Monitor arms offer various types of height adjustability. The most user-friendly option is dynamic height adjustment which allows the user to adjust the monitor height quickly and easily with just the touch of a finger.

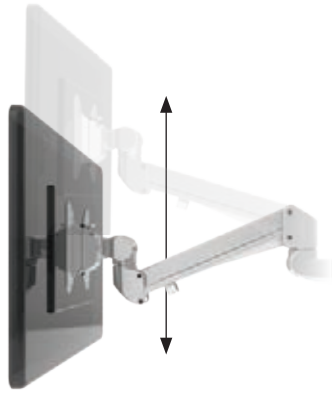

Motion arms move your monitor straight up and down.

Weight of monitor(s)

ESI's standard monitor arms in the Eppa/Edge/Evolve Series support the average monitor weights between 6 to 17 pounds. For heavier monitors, the Edge-Max will support 17 to 32 pounds, and the Kata supports 4 to 20 pounds

Size of monitor(s)

Most users prefer to have their monitors side-by-side as close as possible with no gaps between them. The versatility of ESI monitor arms allow multiple wide monitors to fit side-by-side. Max width is contingent on the monitor meeting the weight capacity of the arms. Configurations that include a slider will provide additional horizontal adjustability, allowing monitors of varying sizes to fit together seamlessly.

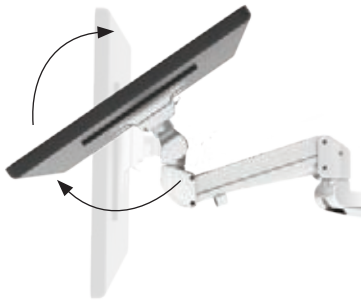

VESA mounts tilt up and down, providing a flat writing surface for touch screen monitors.

Size and shape of the worksurface

Shallow worksurface depths of 24 inches or less, are best suited for monitor arm configurations with fewer limbs or the Evolve slider. For applications that require extended reach, ESI recommends an Evolve configuration with multiple limbs. When positioning two or more monitors side-by-side in a 90° corner, the maximum monitor size will be reduced. Please contact our Customer Service Department to discuss your specific applications and requirements.

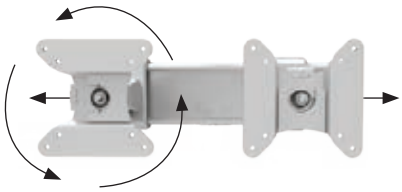

Sliders move your monitor left and right while retaining monitor tilt and ±90° monitor rotation.

Monitor arm movement

Within the ESI monitor arm collection, there are many common movements.

Extension/retraction

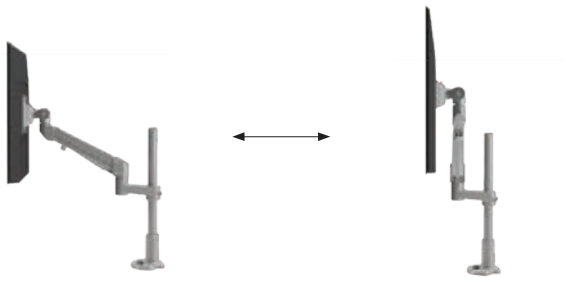

Monitor rotation

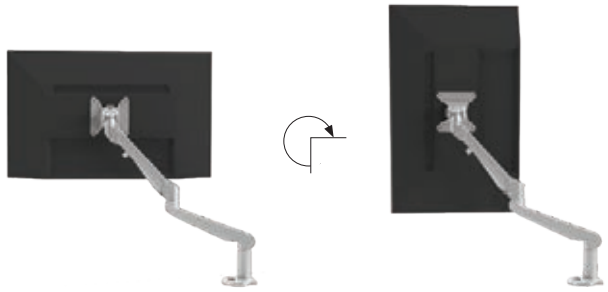

Landscape

Portrait

Tilt

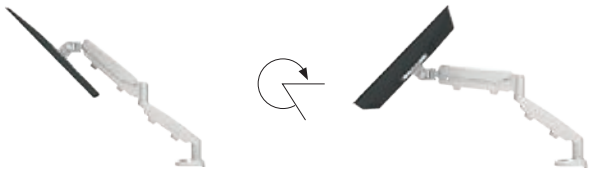

Height adjustment

Fixed arms:

The arms can be mounted at any height along the pole

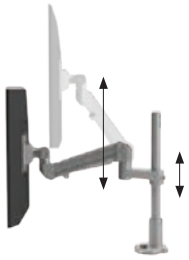

Dynamic motion arms:

Motion arms can move up and down with finger touch adjustment

The arms can be mounted at any height along the pole

Monitor arms

Eppa™ series

Product shown: S2S, Eppa2

Product shown: Eppa2, Centro

Eppa™

Eppa
Single monitor arm

$262

MODEL # EPPA-SLV

Height adjustment
Beneath the Eppa's minimal design is a reliable and smooth finger touch gas spring adjustment control that supports a 10.5 inch dynamic height adjustment range

Retraction
Retracting to a four inch depth and extending 21.2 inches, Eppa offers a comfortable viewing distance no matter the size of the workstation

Conversion
Reuse most of the parts in your single Eppa arm when you convert up to the dual Eppa2 with our simple kit. Conversion kit sold separately

BIFMA
Exceeds BIFMA x5.5 requirements

Features
Finger touch dynamic height adjustment

10.5" height adjustment range
5.5"–16.0" (low/high)

21.2" arm extension

4.0" arm retraction

±90° monitor tilt

±360° VESA rotation

2.2 lbs.–17.6 lbs. weight capacity

VESA quick mount

Desk clamp and grommet mount included

Warranty: 10 yr.

Available arm finishes

Silver -SLV

Eppa conversion kit
Converts an existing Eppa single monitor arm to an Eppa2 dual arm.
Kit includes:
(1) one single arm
(1) one desk stand
(1) one clamp and grommet mount

$271

MODEL # EPPA2KIT-SLV
Available in silver

Eppa2™

Eppa2
Dual monitor arm

$512
MODEL # EPPA2-SLV

Height adjustment
Beneath the Eppa's minimal design is a reliable and smooth finger touch gas spring adjustment control that supports a 10.5 inch dynamic height adjustment range

Retraction
Retracting to a four inch depth and extending 21.2 inches, Eppa offers a comfortable viewing distance no matter the size of the workstation

Dual monitors
Supports two monitors up to 39 inches wide

BIFMA
Exceeds BIFMA x5.5 requirements

Features
Finger touch dynamic height adjustment

10.5" height adjustment range
5.5"–16.0" (low/high)

21.2" arm extension

4.0" arm retraction

±90° monitor tilt

±360° VESA rotation

2.2 lbs.–17.6 lbs. weight capacity
(per arm)

VESA quick mount

Desk clamp and grommet mount included

39.0" max. monitor width
Bezel measured left to right,
Max width is contingent on weight capacity

Warranty: 10 yr.

Available arm finishes

Silver -SLV

Monitor arms

Edge® series

Product shown: Edge2-MS

Product shown: Edge, Triumph-LX, Railway

Edge®

Edge
Single monitor arm

$356
MODEL # EDGE-_ _ _

180° lock-out
Prevents the arm from getting pushed back too far and bumping into a rear cubicle, wall, or glass

VESA quick release
Quickly install and swap monitors with the quick release VESA plate

Conversion
Reuse most of the parts in your single Edge arm when you convert up to the dual Edge2 with our simple kit. Conversion kit sold separately

BIFMA
Exceeds BIFMA x5.5 requirements

Features
Finger touch dynamic height adjustment

Recommended for worksurfaces 24.0"–36.0" deep

12.0" height adjustment range 7.0"–19.0" (low/high)

22.0" arm extension

4.0" arm retraction

±90° monitor tilt

±90° VESA rotation

6.5 lbs.–17.6 lbs. weight capacity

VESA quick release

180° lock-out feature

Desk clamp and grommet mount included

Warranty: 15 yr.

Available arm finishes

- ○ Silver -SLV
- ● Black -BLK
- ○ White -WHT

Edge2 conversion kit
Converts an existing Edge single monitor arm to an Edge2 dual arm
Kit includes:
(1) one single arm
(1) one desk stand
(1) one clamp and grommet mount

$364
MODEL # EDGE2KIT-_ _ _
Available in silver, black and white

Edge2®

Edge2
Dual monitor arm

$671
MODEL # EDGE2-_ _ _

180° lock-out
Prevents the arm from getting pushed back too far and bumping into a rear cubicle, wall, or glass

VESA quick release
Quickly install and swap monitors with the quick release VESA plate

Dual Monitor Arms
Can support two monitors up to 41.5 (32) inches wide

BIFMA
Exceeds BIFMA x5.5 requirements

Features

Finger touch dynamic height adjustment

Recommended for worksurfaces 30.0" deep or corner applications

12.0" height adjustment range
7.0"–19.0" (low/high)

22.0" arm extension

4.0" arm retraction

±90° monitor tilt

±90° VESA rotation

6.5 lbs.–17.6 lbs. weight capacity
(per arm)

VESA quick release

180° lock-out feature

Desk clamp and grommet mount included

32.0" max. monitor width
Bezel measured left to right,
Max width is contingent on weight capacity

Warranty: 15 yr.

Available arm finishes

- Silver -SLV
- Black -BLK
- White -WHT

Edge2-MS

Edge2-MS
Dual monitor arm

$671
MODEL # EDGE2-MS-_ _ _

180° lock-out
Prevents the arm from getting pushed back too far and bumping into a rear cubicle, wall or glass

Slider mount
Position virtually any monitor side-by-side with a slider. The slider offers nine inches of horizontal adjustability, so even monitors of varying sizes can be positioned flush

VESA quick release
Quickly install and swap monitors with the quick release VESA plate

Shallow worksurface
Easily position monitors side-by-side on shallow worksurfaces 24 inches deep or less

BIFMA
Exceeds BIFMA x5.5 requirements

Features

Finger touch dynamic height adjustment

Recommended for worksurfaces 24.0" deep or less

10.5" height adjustment range 3.5"–14.0" (low/high)

16.0" arm extension

6.5" arm retraction

+45°/-50° monitor tilt

±90° VESA rotation

4.4 lbs.–15.4 lbs. weight capacity
(per arm)

VESA quick release

180° lock-out feature

Desk clamp and grommet mount included

28.0" max. monitor width
Bezel measured left to right,
Max width is contingent on weight capacity

Warranty: 15 yr.

Available arm finishes

- Silver -SLV
- Black -BLK
- White -WHT

Edge2-Max

Edge2-Max
Dual monitor arm

$689
MODEL #EDGE2-MAX-SLV

180° lock-out
Prevents the arm from getting pushed back too far and bumping into a rear cubicle, wall, or glass

Crossbar
Can support two monitors up to 24 inches wide

BIFMA
Exceeds BIFMA x5.5 requirements

Features

Finger touch dynamic height adjustment

Recommended for worksurfaces 30.0" deep or less

14.0" height adjustment range 9.0"–23.0" (low/high)

26.6" arm extension

6.5" arm retraction

±55° monitor tilt

±90° VESA rotation

12.0 lbs.–38.5 lbs. weight capacity
(combined weight of both monitors)

180° lock-out feature

Desk clamp and grommet mount included

24.0" max. monitor width
Bezel measured left to right,
Max width is contingent on weight capacity

Warranty: 15 yr.

Available arm finishes

Silver -SLV

Edge-Max

Edge-Max
Heavy duty single monitor arm

$540
MODEL # EDGE-MAX-SLV

Weight capacity
Counterbalances heavy monitors and all-in-one computers

Conversion
Reuse most of the parts in your single Edge-Max arm when you convert up to the Edge-Max-Dual with our simple kit. Conversion kit sold separately

BIFMA
Exceeds BIFMA x5.5 requirements

Features
Finger touch dynamic height adjustment

Recommended for heavy monitors and all-in-one computers

13.5" height adjustment range 9.3"–22.8" (low/high)

22.4" arm extension

4.5" arm retraction

+85°/-35° monitor tilt

±90° VESA rotation

17.6 lbs.–42.0 lbs. weight capacity

VESA quick release

180° lock-out feature

Desk clamp and grommet mount included

Warranty: 15 yr.

Available arm finishes

Silver -SLV

Edge-Max Dual conversion kit
Converts an existing Edge-Max single monitor arm to an Edge-Max-Dual arm.
Kit includes:
(1) one single arm
(1) one desk stand
(1) one clamp and grommet mount

$541
MODEL #EDGE-MAX-DUAL-KIT
Available in silver

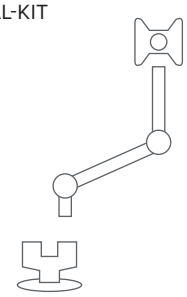

Edge-Max-Dual

Edge-Max-Dual

Heavy duty dual monitor arm

$1,080

MODEL # EDGE-MAX-DUAL-SLV

Weight capacity
Counterbalances heavy monitors and all-in-one computers

Dual monitor arms
Can support two monitors up to 40 inches wide

BIFMA
Exceeds BIFMA x5.5 requirements

Features

Finger touch dynamic height adjustment

Recommended for heavy monitors and all-in-one computers

13.5" height adjustment range
9.3"–22.8" (low/high)

22.4" arm extension

4.5" arm retraction

+85°/-35° monitor tilt

±90° VESA rotation

17.6 lbs.–42.0 lbs. weight capacity (per arm)

VESA quick release

180° lock-out feature

Desk clamp and grommet mount included

40.0" max. monitor width
Bezel measured left to right,
Max width is contingent on weight capacity

Warranty: 15 yr.

GSA

Available arm finishes

Silver -SLV

Edge-Wall

Edge-Wall

Wall-mounted single monitor arm

$362

MODEL # EDGE-WALL-SLV

Wall mount
Wall mount offers similar features as the Edge

180° lock-out
Prevents the arm from getting pushed back too far and bumping into a rear cubicle, wall, or glass

VESA quick release
Quickly install and swap monitors with the quick release VESA plate

Features

Finger touch dynamic height adjustment

Recommended for wall mount applications

12.0" height adjustment range

23.5" arm extension

4.0" arm retraction

+90°/-25° monitor tilt

±90° VESA rotation

6.5 lbs.–17.6 lbs. weight capacity

VESA quick release

180° lock-out feature

Warranty: 15 yr.

Available arm finishes

Silver -SLV

Edge-Slat

Edge-Slat

Slat-mounted single monitor arm

$362

MODEL # EDGE-SLAT-SLV

Slat mount
Slat mount offers similar features as the Edge

180° lock-out
Prevents the arm from getting pushed back too far and bumping into a rear cubicle, wall, or glass

VESA quick release
Quickly install and swap monitors with the quick release VESA plate

Features

Finger touch dynamic height adjustment

Recommended for slat wall applications 0.8"–2.8" wide

12.0" height adjustment range

13.0" arm extension

4.0" arm retraction

+90°/-25° monitor tilt

±90° VESA rotation

6.5 lbs.–17.6 lbs. weight capacity

VESA quick release

180° lock-out feature

Warranty: 15 yr.

GSA

Available arm finishes

Silver -SLV

Edge series

Edge®

Single monitor arm

$356

MODEL # EDGE-_ _ _

- Silver -SLV
- Black -BLK
- White -WHT

Finger touch dynamic height adjustment
Recommended for worksurfaces 24.0"–36.0" deep or corner applications
12.0" height adjustment range 7.0"–19.0" (low/high)
22.0" arm extension
4.0" arm retraction
±90° monitor tilt
±90° VESA rotation
6.5 lbs.–17.6 lbs. weight capacity
VESA quick release
180° lock-out feature
Desk clamp and grommet mount included
–
Warranty: 15 yr.
GSA

Edge2®

Dual monitor arm

$671

MODEL # EDGE2-_ _ _

- Silver -SLV
- Black -BLK
- White -WHT

Finger touch dynamic height adjustment
Recommended for worksurfaces 30.0" deep or corner applications
12.0" height adjustment range 7.0"–19.0" (low/high)
22.0" arm extension
4.0" arm retraction
±90° monitor tilt
±90° VESA rotation
6.5 lbs.–17.6 lbs. weight capacity *(per arm)*
VESA quick release
180° lock-out feature
Desk clamp and grommet mount included
32.0"max. monitor width *Bezel measured left to right, Max width is contingent on weight capacity*
Warranty: 15 yr.
GSA

Edge2-MS

Dual monitor arm

$671

MODEL # EDGE2-MS-_ _ _

- Silver -SLV
- Black -BLK
- White -WHT

Finger touch dynamic height adjustment
Recommended for worksurfaces 24.0" deep or less
10.5" height adjustment range 3.5"–14.0" (low/high)
16.0" arm extension
6.5" arm retraction
+45°/-50° monitor tilt
±90° VESA rotation
4.4 lbs.–15.4 lbs. weight capacity *(per arm)*
VESA quick release
180° lock-out feature
Desk clamp and grommet mount included
28.0" max. monitor width *Bezel measured left to right, Max width is contingent on weight capacity*
Warranty: 15 yr.
GSA

Visit our website for additional specs, dimensional drawings, alternative images and more resources for all of ESI's products.

Edge2-Max

Dual monitor arm

$689

MODEL #EDGE2-MAX-SLV

Silver -SLV

Edge-Max

Heavy duty single monitor arm

$540

MODEL # EDGE-MAX-SLV

Silver -SLV

Edge-Max-Dual

Heavy duty dual monitor arm

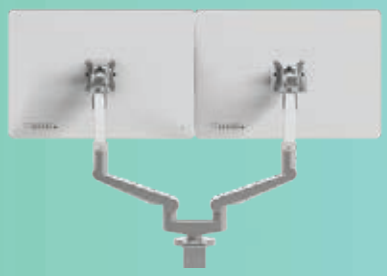

$1,080

MODEL # EDGE-MAX-DUAL-SLV

Silver -SLV

Finger touch dynamic height adjustment	Finger touch dynamic height adjustment	Finger touch dynamic height adjustment
Recommended for worksurfaces 30.0" deep or corner applications	Recommended for heavy monitors and all-in-one computers	Recommended for heavy monitors and all-in-one computers
14.0" height adjustment range 9.0"–23.0" (low/high)	13.5" height adjustment range 9.3"–22.8" (low/high)	13.5" height adjustment range 9.3"–22.8" (low/high)
26.6" arm extension	22.4" arm extension	22.4" arm extension
6.5" arm retraction	4.5" arm retraction	4.5" arm retraction
±55° monitor tilt	+85°/-35° monitor tilt	+85°/-35° monitor tilt
±90° VESA rotation	±90° VESA rotation	±90° VESA rotation
12.0 lbs.–38.5 lbs. weight capacity *(combined weight of both monitors)*	17.6 lbs.–42.0 lbs. weight capacity	17.6 lbs.–42.0 lbs. weight capacity *(per arm)*
–	VESA quick release	VESA quick release
180° lock-out feature	180° lock-out feature	180° lock-out feature
Desk clamp and grommet mount included	Desk clamp and grommet mount included	Desk clamp and grommet mount included
24.0" max. monitor width *Bezel measured left to right, Max width is contingent on weight capacity*	–	40.0" max. monitor width *Bezel measured left to right, Max width is contingent on weight capacity*
Warranty: 15 yr.	Warranty: 15 yr.	Warranty: 15 yr.
GSA	GSA	GSA

Edge series

Edge-Wall

Wall-mounted single monitor arm

$362

MODEL # EDGE-WALL-SLV

Silver -SLV

Finger touch dynamic height adjustment
Recommended for wall mount applications
12.0" height adjustment range
23.5" arm extension
4.0" arm retraction
+90°/-25° monitor tilt
±90° VESA rotation
6.5 lbs.–17.6 lbs. weight capacity
VESA quick release
180° lock-out feature
Warranty: 15 yr.

Edge-Slat

Slat-mounted single monitor arm

$362

MODEL # EDGE-SLAT-SLV

Silver -SLV

Finger touch dynamic height adjustment
Recommended for slat wall applications 0.8"–2.8" wide
12.0" height adjustment range
13.0" arm extension
4.0" arm retraction
+90°/-25° monitor tilt
±90° VESA rotation
6.5 lbs.–17.6 lbs. weight capacity
VESA quick release
180° lock-out feature
Warranty: 15 yr.

Visit our website for additional specs, dimensional drawings, alternative images and more resources for all of ESI's products.

Monitor arms

Evolve series

Product shown: Evolve3-FMS

Evolve1

Evolve-Stubby

Evolve1-F

Evolve motion arms
Evolve configurations that include a motion arm (M) offer finger touch dynamic height adjustment. That means the monitor can reposition up and down with ease

Evolve fixed arms
Evolve configurations using fixed arms (F) have manual height adjustment. They rotate left and right along the pole, offering flexibility with lateral adjustments

Flexible growth
Because the Evolve is pole mounted, arms can be added as needed to support additional monitors

BIFMA
Exceeds BIFMA x5.5 requirements

Evolve Stubby

Single short fixed monitor arm

$253

MODEL # EVOLVE-STUBBY-_ _ _

Features

Manual height adjustment

Recommended for shallow worksurfaces 24.0" deep or less

7.0" arm extension

4.0" arm retraction

+45º/-25º monitor tilt

±90º VESA rotation

0.0 lbs.–20.0 lbs. weight capacity

18.0" pole height

VESA quick release

Desk clamp and grommet mount included

Warranty: 15 yr.

Evolve1-F

Single fixed monitor arm

$308

MODEL # EVOLVE1-F-_ _ _

Features

Manual height adjustment

Recommended for worksurfaces 24.0"–30.0" deep

17.3" arm extension

4.0" arm retraction

+90º/-25º monitor tilt

±90º VESA rotation

0.0 lbs.–20.0 lbs. weight capacity

18.0" pole height

VESA quick release

180º lock-out feature

Desk clamp and grommet mount included

Warranty: 15 yr.

Evolve1-FF

Evolve1-FM

Evolve1-FF

Single fixed + fixed monitor arm

$363

MODEL # EVOLVE1-FF-_ _ _

Features

Manual height adjustment

Recommended for worksurfaces 24.0"–36.0" deep or corner applications

26.8" arm extension

4.0" arm retraction

+90°/-25° monitor tilt

±90° VESA rotation

0.0 lbs.–20.0 lbs. weight capacity

18.0" pole height

VESA quick release

180° lock-out feature

Desk clamp and grommet mount included

Warranty: 15 yr.

Evolve1-FM

Single fixed + motion monitor arm

$444

MODEL # EVOLVE1-FM-_ _ _

Features

Finger touch dynamic height adjustment

Recommended for worksurfaces 24.0"–36.0" deep or corner applications

26.8" arm extension

4.0" arm retraction

+90°/-25° monitor tilt

±90° VESA rotation

6.5 lbs.–17.6 lbs. weight capacity

18.0" pole height

VESA quick release

180° lock-out feature

Desk clamp and grommet mount included

Warranty: 15 yr.

Monitor arm key

F - Fixed monitor arm
M - Motion monitor arm
S - Slider mount

Available arm finishes

Silver -SLV

Black -BLK

White -WHT

Customize the Evolve

As workstation needs change, so can the Evolve configurations. Additional components are sold separately.

Motion arms
Fixed arms
Stubby arms
30.0" pole
Slider mounts

Contact our Customer Service Department for compatibility and pricing for custom configurations

Evolve1

Evolve1-M

Evolve motion arms
Evolve configurations that include a motion arm (M) offer finger touch dynamic height adjustment. That means the monitor can reposition up and down with ease

Slider mount
Position virtually any monitor side-by-side with a slider. The slider (S) offers nine inches of horizontal adjustability, so even monitors of varying sizes can be positioned flush

Flexible growth
Because the Evolve is pole mounted, arms can be added as needed to support additional displays

BIFMA
Exceeds BIFMA x5.5 requirements

Evolve1-M

Single motion monitor arm

$389

MODEL # EVOLVE1-M-_ _ _

Features

Finger touch dynamic height adjustment

Recommended for worksurfaces 24.0"–30.0" deep

16.3" arm extension

4.0" arm retraction

+90°/-25° monitor tilt

±90° VESA rotation

6.5 lbs.–17.6 lbs. weight capacity

18.0" pole height

VESA quick release

180° lock-out feature

Desk clamp and grommet mount included

Warranty: 15 yr.

GSA

Evolve1-MS

Evolve1-MS

Single motion + slider monitor arm

$443

MODEL # EVOLVE1-MS-_ _ _

Features

Finger touch dynamic height adjustment

Recommended for worksurfaces 24.0"–30.0" deep

16.3" arm extension

6.5" arm retraction

+80°/-60° monitor tilt

±90° VESA rotation

4.4 lbs.–15.4 lbs. weight capacity

18.0" pole height

VESA quick release

180° lock-out feature

Desk clamp and grommet mount included

Warranty: 15 yr.

Monitor arm key

F - Fixed monitor arm
M - Motion monitor arm
S - Slider mount

Available arm finishes

Silver -SLV

Black -BLK

White -WHT

Customize the Evolve

As workstation needs change, so can the Evolve configurations. Additional components are sold separately.

Motion arms
Fixed arms
Stubby arms
30.0" pole
Slider mounts

Contact our Customer Service Department for compatibility and pricing for custom configurations

Evolve conversion kit - 1MS2MS

Converts an existing Evolve1-MS single monitor arm to an Evolve2-MS dual arm.
Kit includes:
(1) One slider
(1) One single motion arm
(1) Arm stem

$335

MODEL # EVOLVEKIT-1MS2MS-_ _ _

Available in silver, black and white

Evolve2

Evolve2-F

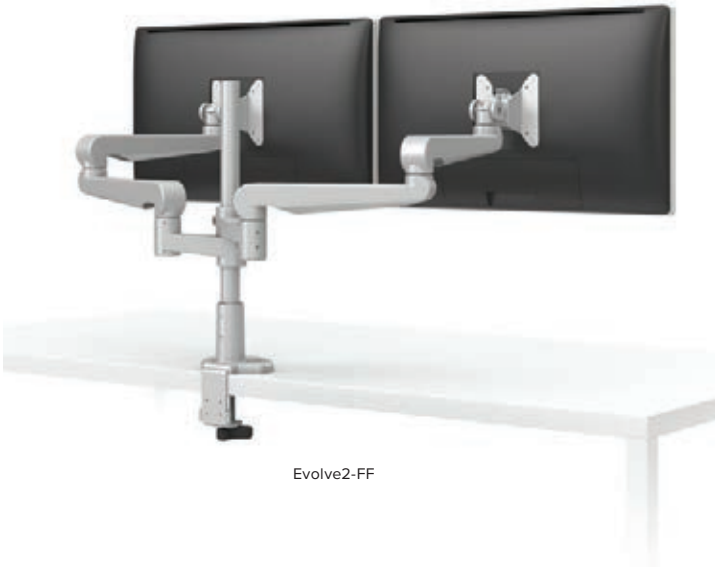

Evolve2-FF

Evolve motion arms
Evolve configurations that include a motion arm (M) offer finger touch dynamic height adjustment. That means the monitor can reposition up and down with ease

Evolve fixed arms
Evolve configurations using fixed arms (F) have manual height adjustment. They rotate left and right along the pole, offering flexibility with lateral adjustments

Slider mount
Position virtually any monitor side-by-side with a slider. The slider (S) offers nine inches of horizontal adjustability, so even monitors of varying sizes can be positioned flush

Flexible growth
Because the Evolve is pole mounted, arms can be added as needed to support additional monitors

BIFMA
Exceeds BIFMA x5.5 requirements

Evolve2-F

Dual fixed monitor arm

$495

MODEL # EVOLVE2-F-_ _ _

Features

Manual height adjustment

Recommended for worksurfaces 24.0"–36.0" deep

16.3" arm extension

4.0" arm retraction

+90°/-25° monitor tilt

±90° VESA rotation

0.0 lbs.–20.0 lbs. weight capacity
(per arm)

18.0" pole height

VESA quick release

180° lock-out feature

Desk clamp and grommet mount included

28.0" max. monitor width
Bezel measured left to right,
Max width is contingent on weight capacity

Warranty: 15 yr.

Evolve2-FF

Dual fixed + fixed monitor arm

$605

MODEL # EVOLVE2-FF-_ _ _

Features

Manual height adjustment

Recommended for worksurfaces 24.0"–36.0" deep or corner applications

26.8" arm extension

4.0" arm retraction

+90°/-25° monitor tilt

±90° VESA rotation

0.0 lbs.–20.0 lbs. weight capacity
(per arm)

18.0" pole height

VESA quick release

180° lock-out feature

Desk clamp and grommet mount included

32.0" max. monitor width
Bezel measured left to right,
Max width is contingent on weight capacity

Warranty: 15 yr.

Evolve2-FS

Evolve2-FM

Evolve2-FS

Dual fixed + slider monitor arm

$617

MODEL # EVOLVE2-FS-_ _ _

Features

Manual height adjustment

Recommended for worksurfaces 24.0" deep or less

16.3" arm extension

6.5" arm retraction

+80°/-60° monitor tilt

±90° VESA rotation

0.0 lbs.–20.0 lbs. weight capacity
(per arm)

18.0" pole height

VESA quick release

180° lock-out feature

Desk clamp and grommet mount included

28.0" max. monitor width
Bezel measured left to right,
Max width is contingent on weight capacity

Warranty: 15 yr.

Evolve2-FM

Dual fixed + motion monitor arm

$730

MODEL # EVOLVE2-FM-_ _ _

Features

Finger touch dynamic height adjustment

Recommended for worksurfaces 24.0"–36.0" deep or corner applications

26.8" arm extension

4.0" arm retraction

+90°/-25° monitor tilt

±90° VESA rotation

6.5 lbs.–17.6 lbs. weight capacity
(per arm)

18.0" pole height

VESA quick release

180° lock-out feature

Desk clamp and grommet mount included

32.0" max. monitor width
Bezel measured left to right,
Max width is contingent on weight capacity

Warranty: 15 yr.

Monitor arm key

F - Fixed monitor arm
M - Motion monitor arm
S - Slider mount

Available arm finishes

Silver -SLV

Black -BLK

White -WHT

Customize the Evolve

As workstation needs change, so can the Evolve configurations. Additional components are sold separately.

- Motion arms
- Fixed arms
- Stubby arms
- 30.0" pole
- Slider mounts

Contact our Customer Service Department for compatibility and pricing for custom configurations

Evolve2

Evolve2-FMS

Evolve2-M

Evolve motion arms
Evolve configurations that include a motion arm (M) offer finger touch dynamic height adjustment. That means the monitor can reposition up and down with ease

Evolve fixed arms
Evolve configurations using fixed arms (F) have manual height adjustment. They rotate left and right along the pole, offering flexibility with lateral adjustments

Slider mount
Position virtually any monitor side-by-side with a slider. The slider (S) offers nine inches of horizontal adjustability, so even monitors of varying sizes can be positioned flush

Flexible growth
Because the Evolve is pole mounted, arms can be added as needed to support additional monitors

BIFMA
Exceeds BIFMA x5.5 requirements

Evolve2-FMS

Dual fixed + motion + slider monitor arm

$889

MODEL # EVOLVE2-FMS-_ _ _

Features

Finger touch dynamic height adjustment

Recommended for worksurfaces 24.0"–36.0" deep or corner applications

28.8" arm extension

6.5" arm retraction

+80°/-60° monitor tilt

±90° VESA rotation

4.4 lbs.–15.4 lbs. weight capacity
(per arm)

18.0" pole height

VESA quick release

180° lock-out feature

Desk clamp and grommet mount included

32.0" max. monitor width
Bezel measured left to right,
Max width is contingent on weight capacity

Warranty: 15 yr

Evolve2-M

Dual motion monitor arm

$658

MODEL # EVOLVE2-M-_ _ _

Features

Finger touch dynamic height adjustment

Recommended for worksurfaces 24.0" deep

16.3" arm extension

4.0" arm retraction

+90°/-25° monitor tilt

±90° VESA rotation

6.5 lbs.–17.6 lbs. weight capacity
(per arm)

18.0" pole height

VESA quick release

180° lock-out feature

Desk clamp and grommet mount included

28.0" max. monitor width
Bezel measured left to right,
Max width is contingent on weight capacity

Warranty: 15 yr.

Evolve2-MS

Evolve2-MS

Dual motion + slider monitor arm

$780

MODEL # EVOLVE2-MS-_ _ _

Features

Finger touch dynamic height adjustment

Recommended for worksurfaces 24.0" deep

26.8" arm extension

6.5" arm retraction

+80°/-60° monitor tilt

±90° VESA rotation

4.4 lbs.–15.4 lbs. weight capacity
(per arm)

18.0" pole height

VESA quick release

180° lock-out feature

Desk clamp and grommet mount included

28.0" max. monitor width
Bezel measured left to right,
Max width is contingent on weight capacity

Warranty: 15 yr.

Monitor arm key

F - Fixed monitor arm
M - Motion monitor arm
S - Slider mount

Available arm finishes

Silver -SLV

Black -BLK

White -WHT

Customize the Evolve

As workstation needs change, so can the Evolve configurations. Additional components are sold separately.

Motion arms
Fixed arms
Stubby arms
30.0" pole
Slider mounts

Contact our Customer Service Department for compatibility and pricing for custom configurations

Evolve3

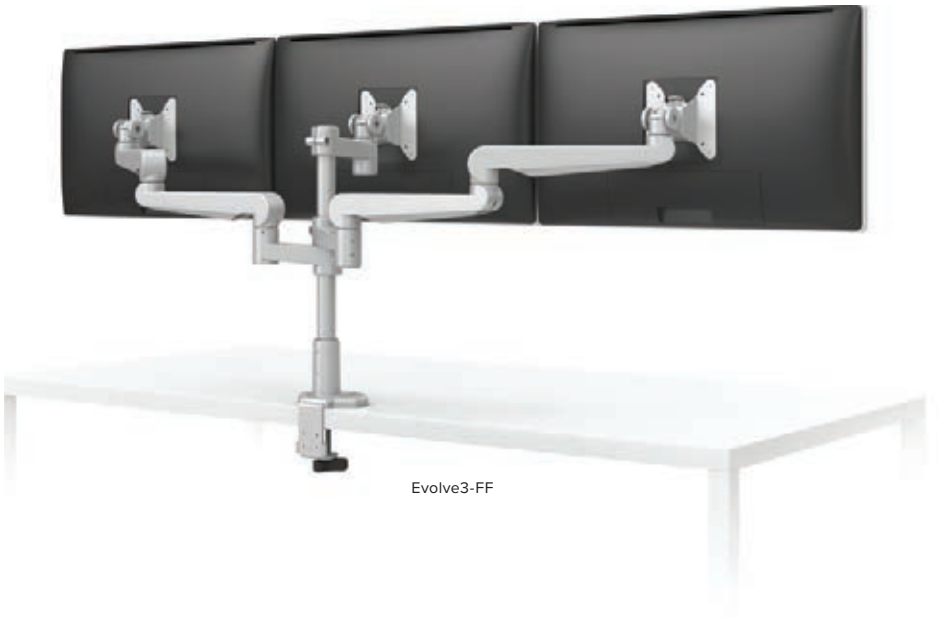

Evolve3-FF

Evolve motion arms
Evolve configurations that include a motion arm (M) offer finger touch dynamic height adjustment. That means the monitor can reposition up and down with ease

Evolve fixed arms
Evolve configurations using fixed arms (F) have manual height adjustment. They rotate left and right along the pole, offering flexibility with lateral adjustments

Slider mount
Position virtually any monitor side-by-side with a slider. The slider (S) offers nine inches of horizontal adjustability, so even monitors of varying sizes can be positioned flush

Flexible growth
Because the Evolve is pole mounted, arms can be added as needed to support additional monitors

BIFMA
Exceeds BIFMA x5.5 requirements

Evolve3-FF

Triple fixed + fixed monitor arm

$737

MODEL # EVOLVE3-FF-_ _ _

Features

Manual height adjustment

Recommended for worksurfaces
24.0" deep or less

26.8" outside arm extension

6.0" center arm extension

4.0" arm retraction

+90°/-25° monitor tilt

±90° VESA rotation

0.0 lbs.–20.0 lbs. weight capacity *(middle arm)*
4.4 lbs.–15.4 lbs. weight capacity *(per outside arm)*

18.0" pole height

VESA quick release

180° lock-out feature

Desk clamp and grommet mount included

21.5" max. monitor width
Bezel measured left to right,
Max width is contingent on weight capacity

Warranty: 15 yr.

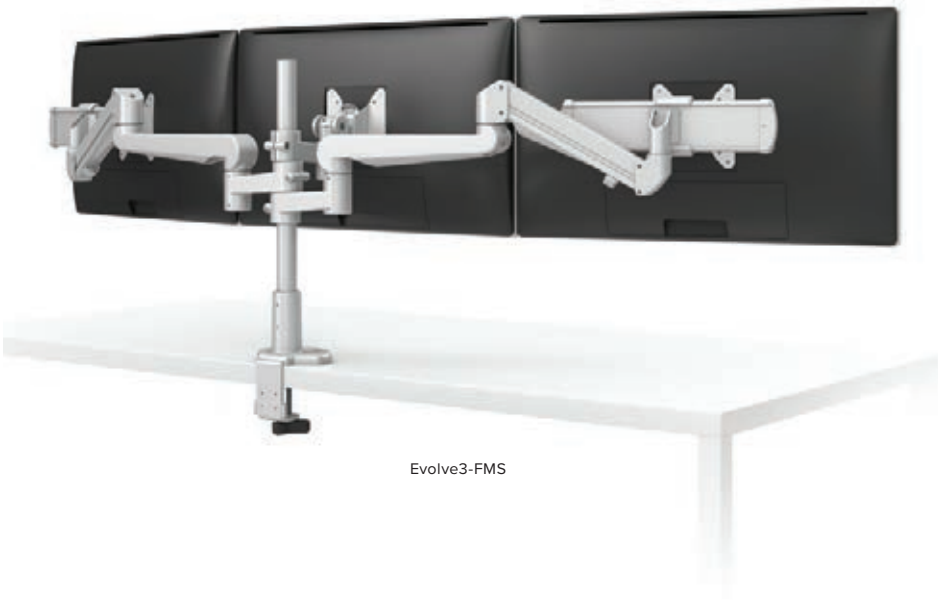

Evolve3-FMS

Evolve3-FMS

Triple fixed + motion + slider monitor arm

$1,022

MODEL # EVOLVE3-FMS-_ _ _

Features

Finger touch dynamic height adjustment

Recommended for worksurfaces
24.0"–30.0" deep

28.8" outside arm extension

6.0" center arm extension

6.5" arm retraction

+80°/-60° monitor tilt *(slider mount)*
+90°/-25° monitor tilt *(standard mount)*

±90° VESA rotation

0.0 lbs.–20.0 lbs. weight capacity *(middle arm)*
4.4 lbs.–15.4 lbs. weight capacity *(per outside arm)*

18.0" pole height

VESA quick release

180° lock-out feature

Desk clamp and grommet mount included

24.5" max. monitor width
Bezel measured left to right,
Max width is contingent on weight capacity

Warranty: 15 yr.

Monitor arm key

F - Fixed monitor arm
M - Motion monitor arm
S - Slider mount

Available arm finishes

Silver -SLV

Black -BLK

White -WHT

Customize the Evolve

As workstation needs change, so can the Evolve configurations. Additional components are sold separately.

Motion arms
Fixed arms
Stubby arms
30.0" pole
Slider mounts

Contact our Customer Service Department for compatibility and pricing for custom configurations

Evolve4

Evolve4-FF

Evolve4-FM

Evolve motion arms
Evolve configurations that include a motion arm (M) offer finger touch dynamic height adjustment. That means the monitor can reposition up and down with ease

Evolve fixed arms
Evolve configurations using fixed arms (F) have manual height adjustment. They rotate left and right along the pole, offering flexibility with lateral adjustments

Slider mount
Position virtually any monitor side-by-side with a slider. The slider (S) offers nine inches of horizontal adjustability, so even monitors of varying sizes can be positioned flush

30 inch pole
With additional monitors, a 30 inch pole accommodates the height growth of these configurations

BIFMA
Exceeds BIFMA x5.5 requirements

Evolve4-FF

Quad fixed + fixed monitor arm

$1,098

MODEL # EVOLVE4-FF-_ _ _

Features

Manual height adjustment

Recommended for worksurfaces 30.0" deep or corner applications

26.8" arm extension

4.0" arm retraction

+90°/-25° monitor tilt

±90° VESA rotation

0.0 lbs.–20.0 lbs. weight capacity (per arm)

30.0" pole height

VESA quick release

180° lock-out feature

Desk clamp and grommet mount included

32.0" max. monitor width
Bezel measured left to right,
Max width is contingent on weight capacity
Note: monitor height/weight might limit size

Warranty: 15 yr.

Evolve4-FM

Quad fixed + motion monitor arm

$1,423

MODEL # EVOLVE4-FM-_ _ _

Features

Finger touch dynamic height adjustment

Recommended for worksurfaces 30.0" deep or corner applications

26.8" arm extension

4.0" arm retraction

+90°/-25° monitor tilt

±90° VESA rotation

6.5 lbs.–17.6 lbs. weight capacity
(per arm)

30.0" pole height

VESA quick release

180° lock-out feature

Desk clamp and grommet mount included

32.0" max. monitor width
Bezel measured left to right,
Max width is contingent on weight capacity
Note: monitor height/weight might limit size

Warranty: 15 yr.

Evolve4-FMS

Evolve4-MS

Evolve4-FMS

Quad fixed + motion + slider monitor arm

$1,667

MODEL # EVOLVE4-FMS-_ _ _

Features

Finger touch dynamic height adjustment

Recommended for worksurfaces
30.0"–36.0" deep or corner applications

28.8" arm extension

6.5" arm retraction

+80°/-60° monitor tilt

±90° VESA rotation

4.4 lbs.–15.4 lbs. weight capacity
(per arm)

30.0" pole height

VESA quick release

180° lock-out feature

Desk clamp and grommet mount included

32.0" max. monitor width
Bezel measured left to right,
Max width is contingent on weight capacity
Note: monitor height/weight might limit size

Warranty: 15 yr.

Evolve4-MS

Quad motion + slider monitor arm

$1,448

MODEL # EVOLVE4-MS-_ _ _

Features

Finger touch dynamic height adjustment

Recommended for worksurfaces
24.0" deep or less

18.8" arm extension

6.5" arm retraction

+80°/-60° monitor tilt

±90° VESA rotation

4.4 lbs.–15.4 lbs. weight capacity
(per arm)

30.0" pole height

VESA quick release

180° lock-out feature

Desk clamp and grommet mount included

32.0" max. monitor width
Bezel measured left to right,
Max width is contingent on weight capacity
Note: monitor height/weight might limit size

Warranty: 15 yr.

Monitor arm key

F - Fixed monitor arm
M - Motion monitor arm
S - Slider mount

Available arm finishes

Silver -SLV

Black -BLK

White -WHT

Customize the Evolve

As workstation needs change, so can the Evolve configurations. Additional components are sold separately.

Motion arms
Fixed arms
Stubby arms
30.0" pole
Slider mounts

Contact our Customer Service Department for compatibility and pricing for custom configurations

Evolve6

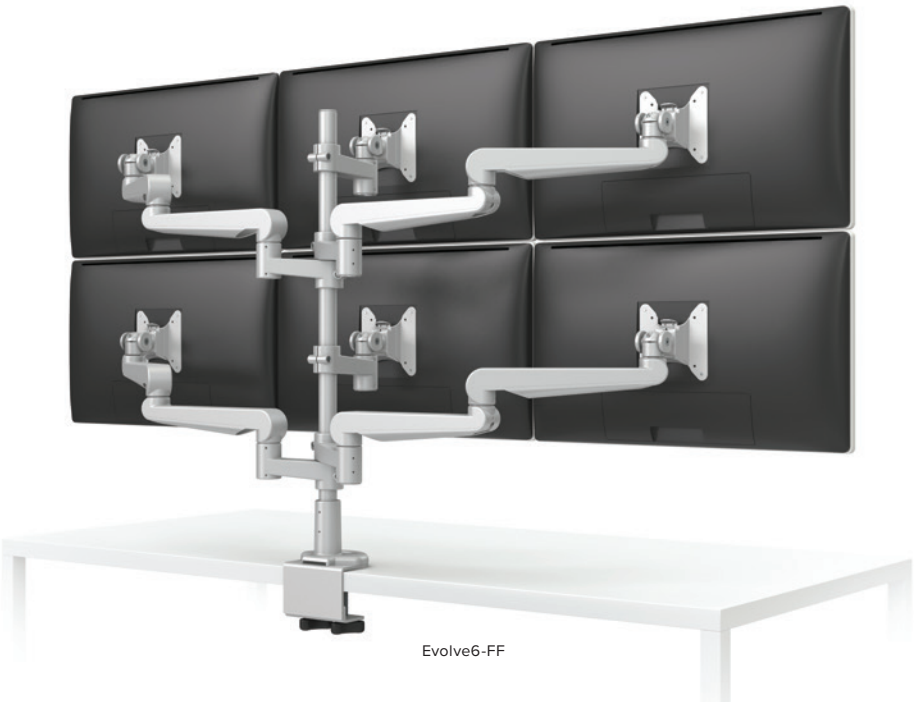

Evolve6-FF

Evolve motion arms
Evolve configurations that include a motion arm (M) offer finger touch dynamic height adjustment. That means the monitor can reposition up and down with ease

Evolve fixed arms
Evolve configurations using fixed arms (F) have manual height adjustment. They rotate left and right along the pole, offering flexibility with lateral adjustments

Slider mount
Position virtually any monitor side-by-side with a slider. The slider (S) offers nine inches of horizontal adjustability, so even monitors of varying sizes can be positioned flush

30 inch pole
With additional monitors, a 30 inch pole accommodates the height growth of these configurations

BIFMA
Exceeds BIFMA x5.5 requirements

Evolve6-FF

Six fixed + fixed monitor arm

$1,364

MODEL # EVOLVE6-FF-_ _ _

Features

Manual height adjustment

Recommended for worksurfaces
24.0" deep or less

26.8" outside arm extension

6.0" center arm extension

4.0" arm retraction

+90°/-25° monitor tilt

±90° VESA rotation

0.0 lbs.–20.0 lbs. weight capacity *(per middle arm)*
4.4 lbs.–15.4 lbs. weight capacity *(per outside arm)*

30.0" pole height

VESA quick release

180° lock-out feature

Desk clamp and grommet mount included

21.5" max. monitor width
Bezel measured left to right,
Max width is contingent on weight capacity

Note: monitor height/weight might limit size

Warranty: 15 yr.

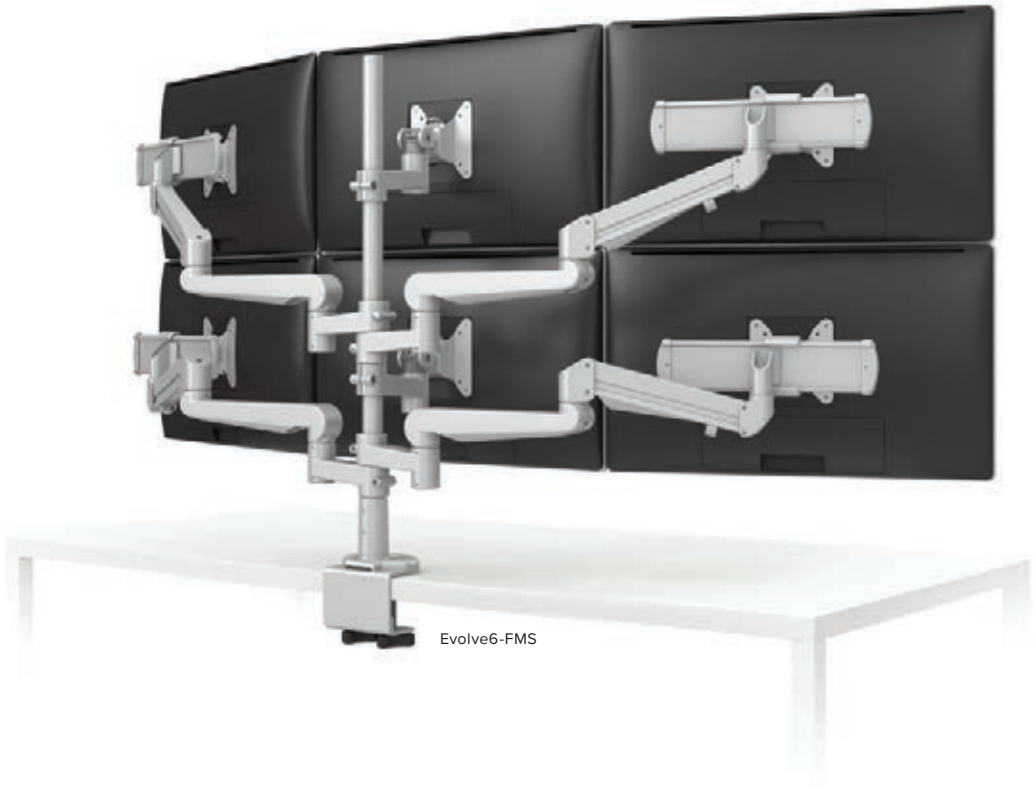

Evolve6-FMS

Evolve6-FMS

Six fixed + motion + slider monitor arm

$1,932

MODEL # EVOLVE6-FMS-_ _ _

Features

Finger touch dynamic height adjustment

Recommended for worksurfaces
24.0"–36.0" deep

28.8" outside arm extension

6.0" center arm extension

6.5" arm retraction

+80°/-60° monitor tilt *(slider mount)*
+45°/-25° monitor tilt *(standard mount)*

±90° VESA rotation

0.0 lbs.–20.0 lbs. weight capacity *(per middle arm)*
4.4 lbs.–15.4 lbs. weight capacity *(per outside arm)*

30.0" pole height

VESA quick release

180° lock-out feature

Desk clamp and grommet mount included

24.5" max. monitor width
Bezel measured left to right,
Max width is contingent on weight capacity
Note: monitor height/weight might limit size

Warranty: 15 yr.

Monitor arm key

F - Fixed monitor arm
M - Motion monitor arm
S - Slider mount

Available arm finishes

Silver -SLV

Black -BLK

White -WHT

Customize the Evolve

As workstation needs change, so can the Evolve configurations. Additional components are sold separately.

- Motion arms
- Fixed arms
- Stubby arms
- 30.0" pole
- Slider mounts

Contact our Customer Service Department for compatibility and pricing for custom configurations

Product shown: Evolve2-FMS, All-Flex 3-leg, CPU-05, Lustre, FlexCharge4, Conceal

Evolve series

Evolve-Stubby

Single short fixed monitor arm

$253

Evolve1-F

Single fixed monitor arm

$308

Evolve1-FF

Single fixed + fixed monitor arm

$363

MODEL # EVOLVE-STUBBY-_ _ _	MODEL # EVOLVE1-F-_ _ _	MODEL # EVOLVE1-FF-_ _ _
○ Silver -SLV	○ Silver -SLV	○ Silver -SLV
● Black -BLK	● Black -BLK	● Black -BLK
○ White -WHT	○ White -WHT	○ White -WHT
Manual height adjustment	Manual height adjustment	Manual height adjustment
Recommended for shallow worksurfaces 24.0" deep or less	Recommended for worksurfaces 24.0"–30.0" deep	Recommended for worksurfaces 24.0"–36.0" deep or corner applications
7.0" arm extension	17.3" arm extension	26.8" arm extension
4.0" arm retraction	4.0" arm retraction	4.0" arm retraction
+45°/-25° monitor tilt	+90°/-25° monitor tilt	+90°/-25° monitor tilt
±90° VESA rotation	±90° VESA rotation	±90° VESA rotation
0.0 lbs.–20.0 lbs. weight capacity	0.0 lbs.–20.0 lbs. weight capacity	0.0 lbs.–20.0 lbs. weight capacity
18.0" pole height	18.0" pole height	18.0" pole height
VESA quick release	VESA quick release	VESA quick release
–	180° lock-out feature	180° lock-out feature
Desk clamp and grommet mount included	Desk clamp and grommet mount included	Desk clamp and grommet mount included
Warranty: 15 yr.	Warranty: 15 yr.	Warranty: 15 yr.
GSA	GSA	GSA

Evolve series

Evolve1-FM

Single fixed + motion monitor arm

$444

Evolve1-M

Single motion monitor arm

$389

Evolve1-MS

Single motion + slider monitor arm

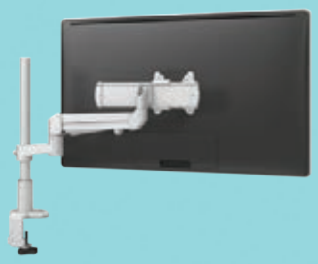

$443

Evolve1-FM	Evolve1-M	Evolve1-MS
MODEL # EVOLVE1-FM-_ _ _	MODEL # EVOLVE1-M-_ _ _	MODEL # EVOLVE1-MS-_ _ _
Silver -SLV	Silver -SLV	Silver -SLV
Black -BLK	Black -BLK	Black -BLK
White -WHT	White -WHT	White -WHT
Finger touch dynamic height adjustment	Finger touch dynamic height adjustment	Finger touch dynamic height adjustment
Recommended for worksurfaces 24.0"–36.0" deep or corner applications	Recommended for worksurfaces 24.0"–30.0" deep	Recommended for worksurfaces 24.0"–30.0" deep
26.8" arm extension	16.3" arm extension	16.3" arm extension
4.0" arm retraction	4.0" arm retraction	6.5" arm retraction
+90°/-25° monitor tilt	+90°/-25° monitor tilt	+80°/-60° monitor tilt
±90° VESA rotation	±90° VESA rotation	±90° VESA rotation
6.5 lbs.–17.6 lbs. weight capacity	6.5 lbs.–17.6 lbs. weight capacity	4.4 lbs.–15.4 lbs. weight capacity
18.0" pole height	18.0" pole height	18.0" pole height
VESA quick release	VESA quick release	VESA quick release
180° lock-out feature	180° lock-out feature	180° lock-out feature
Desk clamp and grommet mount included	Desk clamp and grommet mount included	Desk clamp and grommet mount included
–	–	–
Warranty: 15 yr.	Warranty: 15 yr.	Warranty: 15 yr.
GSA	GSA	GSA

Visit our website for additional specs, dimensional drawings, alternative images and more resources for all of ESI's products.

Evolve2-F

Dual fixed monitor arm

$495

Evolve2-FF

Dual fixed + fixed monitor arm

$605

Evolve2-FS

Dual fixed + slider monitor arm

$617

MODEL # EVOLVE2-F-_ _ _	MODEL # EVOLVE2-FF-_ _ _	MODEL # EVOLVE2-FS-_ _ _
○ Silver -SLV	○ Silver -SLV	○ Silver -SLV
● Black -BLK	● Black -BLK	● Black -BLK
○ White -WHT	○ White -WHT	○ White -WHT
Manual height adjustment	Manual height adjustment	Manual height adjustment
Recommended for worksurfaces 24.0"–30.0" deep	Recommended for worksurfaces 24.0"–36.0" deep or corner applications	Recommended for worksurfaces 24.0" deep or less
16.3" arm extension	26.8" arm extension	16.3" arm extension
4.0" arm retraction	4.0" arm retraction	6.5" arm retraction
+90°/-25° monitor tilt	+90°/-25° monitor tilt	+80°/-60° monitor tilt
±90° VESA rotation	±90° VESA rotation	±90° VESA rotation
0.0 lbs.–20.0 lbs. weight capacity *(per arm)*	0.0 lbs.–20.0 lbs. weight capacity *(per arm)*	0.0 lbs.–20.0 lbs. weight capacity *(per arm)*
18.0" pole height	18.0" pole height	18.0" pole height
VESA quick release	VESA quick release	VESA quick release
180° lock-out feature	180° lock-out feature	180° lock-out feature
Desk clamp and grommet mount included	Desk clamp and grommet mount included	Desk clamp and grommet mount included
28.0" max. monitor width *Bezel measured left to right, Max width is contingent on weight capacity*	32.0" max. monitor width *Bezel measured left to right, Max width is contingent on weight capacity*	28.0" max. monitor width *Bezel measured left to right, Max width is contingent on weight capacity*
Warranty: 15 yr.	Warranty: 15 yr.	Warranty: 15 yr.
GSA	GSA	GSA

Evolve series

Evolve2-FM

Dual fixed + motion monitor arm

$730

Evolve2-FMS

Dual fixed + motion + slider monitor arm

$889

Evolve2-M

Dual motion monitor arm

$658

MODEL # EVOLVE2-FM-_ _ _	MODEL # EVOLVE2-FMS-_ _ _	MODEL # EVOLVE2-M-_ _ _
○ Silver -SLV	○ Silver -SLV	○ Silver -SLV
● Black -BLK	● Black -BLK	● Black -BLK
○ White -WHT	○ White -WHT	○ White -WHT
Finger touch dynamic height adjustment	Finger touch dynamic height adjustment	Finger touch dynamic height adjustment
Recommended for worksurfaces 24.0"–36.0" deep or corner applications	Recommended for worksurfaces 24.0"–36.0" deep or corner applications	Recommended for worksurfaces 24.0" deep or less
26.8" arm extension	28.8" arm extension	16.3" arm extension
–	–	–
4.0" arm retraction	6.5" arm retraction	4.0" arm retraction
+90°/-25° monitor tilt	+80°/-60° monitor tilt	+90°/-25° monitor tilt
±90° VESA rotation	±90° VESA rotation	±90° VESA rotation
6.5 lbs.–17.6 lbs. weight capacity *(per arm)*	4.4 lbs.–15.4 lbs. weight capacity *(per arm)*	6.5 lbs.–17.6 lbs. weight capacity *(per arm)*
18.0" pole height	18.0" pole height	18.0" pole height
VESA quick mount	VESA quick mount	VESA quick mount
180° lock-out feature	180° lock-out feature	180° lock-out feature
Desk clamp and grommet mount included	Desk clamp and grommet mount included	Desk clamp and grommet mount included
32.0" max. monitor width *Bezel measured left to right, Max width is contingent on weight capacity*	32.0" max. monitor width *Bezel measured left to right, Max width is contingent on weight capacity*	28.0" max. monitor width *Bezel measured left to right, Max width is contingent on weight capacity*
Warranty: 15 yr.	Warranty: 15 yr.	Warranty: 15 yr.
GSA	GSA	GSA

Visit our website for additional specs, dimensional drawings, alternative images and more resources for all of ESI's products.

Evolve2-MS

Dual motion + slider monitor arm

$780

Evolve3-FF

Triple fixed + fixed monitor arm

$737

Evolve3-FMS

Triple fixed + motion + slider monitor arm

$1,022

MODEL # EVOLVE2-MS-_ _ _	MODEL # EVOLVE3-FF-_ _ _	MODEL # EVOLVE3-FMS-_ _ _
○ Silver -SLV ● Black -BLK ○ White -WHT	○ Silver -SLV ● Black -BLK ○ White -WHT	○ Silver -SLV ● Black -BLK ○ White -WHT
Finger touch dynamic height adjustment	Manual height adjustment	Finger touch dynamic height adjustment
Recommended for worksurfaces 24.0" deep or less	Recommended for worksurfaces 24.0" deep or less	Recommended for worksurfaces 24.0"–30.0" deep
16.3" arm extension	26.8" outside arm extension	28.8" outside arm extension
–	6.0" center arm extension	6.0" center arm extension
6.5" arm retraction	4.0" arm retraction	6.5" arm retraction
+80°/-60° monitor tilt	+90°/-25° monitor tilt	+80°/-60° monitor tilt *(slider mount)* +90°/-25° monitor tilt *(standard mount)*
±90° VESA rotation	±90° VESA rotation	±90° VESA rotation
4.4 lbs.–15.4 lbs. weight capacity *(per arm)*	0.0 lbs.–20.0 lbs. weight capacity *(middle arm)* 4.4 lbs.–15.4 lbs. weight capacity *(per outside arms)*	0.0 lbs.–20.0 lbs. weight capacity *(middle arm)* 4.4 lbs.–15.4 lbs. weight capacity *(per outside arms)*
18.0" pole height	18.0" pole height	18.0" pole height
VESA quick mount	VESA quick mount	VESA quick mount
180° lock-out feature	180° lock-out feature	180° lock-out feature
Desk clamp and grommet mount included	Desk clamp and grommet mount included	Desk clamp and grommet mount included
28.0" max. monitor width *Bezel measured left to right,* *Max width is contingent on weight capacity*	21.5" max. monitor width *Bezel measured left to right,* *Max width is contingent on weight capacity*	24.5" max. monitor width *Bezel measured left to right,* *Max width is contingent on weight capacity*
Warranty: 15 yr.	Warranty: 15 yr.	Warranty: 15 yr.
GSA	GSA	GSA

Evolve series

Evolve4-FF

Quad fixed + fixed monitor arm

$1,098

Evolve4-FM

Quad fixed + motion monitor arm

$1,423

Evolve4-FMS

Quad fixed + motion + slider monitor arm

$1,667

MODEL # EVOLVE4-FF-_ _ _	MODEL # EVOLVE4-FM-_ _ _	MODEL # EVOLVE4-FMS-_ _ _
○ Silver -SLV ● Black -BLK ○ White -WHT	○ Silver -SLV ● Black -BLK ○ White -WHT	○ Silver -SLV ● Black -BLK ○ White -WHT
Manual height adjustment	Finger touch dynamic height adjustment	Finger touch dynamic height adjustment
Recommended for worksurfaces 30.0" deep or corner applications	Recommended for worksurfaces 30.0" deep or corner applications	Recommended for worksurfaces 30.0"–36.0" deep or corner applications
26.8" outside arm extension	26.8" outside arm extension	28.8" outside arm extension
–	–	–
4.0" arm retraction	4.0" arm retraction	6.5" arm retraction
+90°/-25° monitor tilt	+90°/-25° monitor tilt	+80°/-60° monitor tilt
±90° VESA rotation	±90° VESA rotation	±90° VESA rotation
0.0 lbs.–20.0 lbs. weight capacity *(per arm)*	6.5 lbs.–17.6 lbs. weight capacity *(per arm)*	4.4 lbs.–15.4 lbs. weight capacity *(per arm)*
30.0" pole height	30.0" pole height	30.0" pole height
VESA quick release	VESA quick release	VESA quick release
180° lock-out feature	180° lock-out feature	180° lock-out feature
Desk clamp and grommet mount included	Desk clamp and grommet mount included	Desk clamp and grommet mount included
32.0" max. monitor width *Bezel measured left to right, Max width is contingent on weight capacity Note: monitor height/weight might limit size*	32.0" max. monitor width *Bezel measured left to right, Max width is contingent on weight capacity Note: monitor height/weight might limit size*	32.0" max. monitor width *Bezel measured left to right, Max width is contingent on weight capacity Note: monitor height/weight might limit size*
Warranty: 15 yr.	Warranty: 15 yr.	Warranty: 15 yr.
GSA	GSA	GSA

Visit our website for additional specs, dimensional drawings, alternative images and more resources for all of ESI's products.

Evolve4-MS

Quad motion + slider monitor arm

$1,448

Evolve6-FF

Six fixed + fixed monitor arm

$1,364

Evolve6-FMS

Six fixed + motion + slider monitor arm

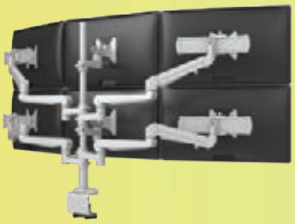

$1,932

MODEL # EVOLVE4-MS-_ _ _	MODEL # EVOLVE6-FF-_ _ _	MODEL # EVOLVE6-FMS-_ _ _
○ Silver -SLV ● Black -BLK ○ White -WHT	○ Silver -SLV ● Black -BLK ○ White -WHT	○ Silver -SLV ● Black -BLK ○ White -WHT
Finger touch dynamic height adjustment	Manual height adjustment	Finger touch dynamic height adjustment
Recommended for worksurfaces 24.0" deep or less	Recommended for worksurfaces 24.0" deep or less	Recommended for worksurfaces 24.0"–30.0" deep
18.8" outside arm extension	26.8" outside arm extension	28.8" outside arm extension
_	6.0" center arm extension	6.0" center arm extension
6.5" arm retraction	4.0" arm retraction	6.5" arm retraction
+80°/-60° monitor tilt	+90°/-25° monitor tilt	+80°/-60° monitor tilt *(slider mount)* +45°/-25° monitor tilt *(standard mount)*
±90° VESA rotation	±90° VESA rotation	±90° VESA rotation
4.4 lbs.–15.4 lbs. weight capacity *(per arm)*	0.0 lbs.–20.0 lbs. weight capacity *(per middle arm)* 4.4 lbs.–15.4 lbs. weight capacity *(per outside arm)*	0.0 lbs.–20.0 lbs. weight capacity *(per middle arm)* 4.4 lbs.–15.4 lbs. weight capacity *(per outside arm)*
30.0" pole height	30.0" pole height	30.0" pole height
VESA quick release	VESA quick release	VESA quick release
180° lock-out feature	180° lock-out feature	180° lock-out feature
Desk clamp and grommet mount included	Desk clamp and grommet mount included	Desk clamp and grommet mount included
28.0" max. monitor width *Bezel measured left to right,* *Max width is contingent on weight capacity* *Note: monitor height/weight might limit size*	21.5" max. monitor width *Bezel measured left to right,* *Max width is contingent on weight capacity* *Note: monitor height/weight might limit size*	24.5" max. monitor width *Bezel measured left to right,* *Max width is contingent on weight capacity* *Note: monitor height/weight might limit size*
Warranty: 15 yr.	Warranty: 15 yr.	Warranty: 15 yr.
GSA	GSA	GSA

Monitor arms

Kata™ series

Product shown: Kata

Product shown: Kata2, Lustre

Kata™

Kata
Single monitor arm

$381
MODEL # KATA-DC- _ _ _
MODEL # KATA-GM- _ _ _

Propietary design
Kata has been uniquely designed for ESI

Designer styling
Refinement finally achieved with an ideal balance of flow and support. Distinctive in appearance, the scaled down design emphasizes the key pivot points, making adjustments intuitive and effortless

Tension adjustment indicator
A clear gauge on the back of the arm allows users to see tension levels while adjusting the arm for various weight levels

Conversion
Reuse most of the parts in your single Kata arm when you convert up to the dual Kata2 with our simple kit. Conversion kit sold separately

Features
Finger touch dynamic height adjustment

Recommended for worksurfaces 24.0"–36.0" deep

14.0" height adjustment range 7.0"–21.0" (low/high)

21.0" arm extension

5.5" arm retraction

+90°/-25° monitor tilt

±90° VESA rotation

4 lbs.–20 lbs. weight capacity

VESA 75mm/100mm quick release

180° lock-out feature

Includes a grommet mount or a desk clamp mount

Tension adjustment indicator for precision installation

Fully assembled for quick installation

Integrated cord management

Integrated tool holder

Warranty: 15 yr.

Available arm finishes

- Silver -SLV
- Black -BLK
- White -WHT

Kata2 conversion kit
Converts an existing Kata single monitor arm to a Kata2 dual arm.
Kit includes:
(1) one single arm
(1) one desk stand
(1) one desk clamp

$388
MODEL # KATA2KIT-_ _ _
Available in silver, black and white

Kata2™

Kata2
Dual monitor arm

$716
MODEL # KATA2-DC- _ _ _
MODEL # KATA2-GM- _ _ _

Propietary design
Kata has been uniquely designed for ESI

Designer styling
Refinement finally achieved with an ideal balance of flow and support. Distinctive in appearance, the scaled down design emphasizes the key pivot points, making adjustments intuitive and effortless

Tension adjustment indicator
A clear gauge on the back of the arm allows users to see tension levels while adjusting the arm for various weight levels

Dual Monitor Arms
Can support two monitors up to 41.5 inches wide

Features

Finger touch dynamic height adjustment

Recommended for worksurfaces 24.0"–36.0" deep

14.0" height adjustment range 7.0"–21.0" (low/high)

21.0" arm extension

5.5" arm retraction

+90°/-25° monitor tilt

±90° VESA rotation

4lbs.–20 lbs. weight capacity
(per arm)

VESA 75mm/100mm quick release

180° lock-out feature

Includes a grommet mount or a desk clamp mount

Tension adjustment indicator for precision installation

Partially assembled for quick installation

Integrated cord management

Integrated tool holder

29.0" max. monitor width
Bezel measured left to right,
Max width is contingent on weight capacity

Warranty: 15 yr.

Available arm finishes

- Silver -SLV
- Black -BLK
- White -WHT

Kata2-MS™

Kata2-MS
Dual monitor arm

$716

Available Summer 2019

MODEL # KATA2-MS-DC- _ _ _
MODEL # KATA2-MS-GM- _ _ _

Proprietary design
Kata has been uniquely designed for ESI

Designer styling
Refinement finally achieved with an ideal balance of flow and support. Distinctive in appearance, the scaled down design emphasizes the key pivot points, making adjustments intuitive and effortless

Tension adjustment indicator
A clear gauge on the back of the arm allows users to see tension levels while adjusting the arm for various weight levels

Dual Monitor Arms
Can support two monitors up to 32 inches wide

Slider mount
Position virtually any monitor side-by-side with a slider. The slider offers nine inches of horizontal adjustability, so even monitors of varying sizes can be positioned flush

Features

Finger touch dynamic height adjustment

Recommended for worksurfaces 24.0"deep or less

10.0" height adjustment range 4.0"–14.5" (low/high)

21.0" arm extension

5.5" arm retraction

+90°/-25° monitor tilt

±90° VESA rotation

2.8lbs.–18.2 lbs. weight capacity
(per arm)

VESA 75mm/100mm quick release

180° lock-out feature

Includes a grommet mount or a desk clamp mount

Tension adjustment indicator for precision installation

Partially assembled for quick installation

Integrated cord management

Integrated tool holder

32.0" max. monitor width
Bezel measured left to right,
Max width is contingent on weight capacity

Warranty: 15 yr.

Available arm finishes

- Silver -SLV
- Black -BLK
- White -WHT

Kata series

Kata™

Single monitor arm

$381

MODEL # KATA-DC-_ _ _
MODEL # KATA-GM-_ _ _

- Silver -SLV
- Black -BLK
- White -WHT

Finger touch dynamic height adjustment
Recommended for worksurfaces 24.0"–36.0" deep
14.0" height adjustment range 7.0"–21.0" (low/high)
21.0" arm extension
5.5" arm retraction
+90°/-25° monitor tilt
±90° VESA rotation
4 lbs.–20 lbs. weight capacity
VESA 75mm/100mm quick release
180° lock-out feature
Includes a grommet mount or a desk clamp mount
Fully assembled for quick installation
Integrated cord management
Integrated tool holder
Warranty: 15 yr.

Kata2™

Dual monitor arm

$716

MODEL # KATA2-DC-_ _ _
MODEL # KATA2-GM-_ _ _

- Silver -SLV
- Black -BLK
- White -WHT

Finger touch dynamic height adjustment
Recommended for worksurfaces 30.0" deep or corner applications
14.0" height adjustment range 7.0"–21.0" (low/high)
21.0" arm extension
5.5" arm retraction
+90°/-25° monitor tilt
±90° VESA rotation
4 lbs.–20 lbs. weight capacity *(per arm)*
VESA 75mm/100mm quick release
180° lock-out feature
Includes a grommet mount or a desk clamp mount
Fully assembled for quick installation
Integrated cord management
Integrated tool holder
29.0" max. monitor width *Bezel measured left to right,* *Max width is contingent on weight capacity*
Warranty: 15 yr.

Kata2-MS

Dual monitor arm with slider

$716 ***Available Summer 2019***

MODEL # KATA2-MS-DC-_ _ _
MODEL # KATA2-MS-GM-_ _ _

- Silver -SLV
- Black -BLK
- White -WHT

Finger touch dynamic height adjustment
Recommended for worksurfaces 24.0" deep or less
10.5" height adjustment range 4.0"–14.5" (low/high)
14.5" arm extension
5.5" arm retraction
+90°/-25° monitor tilt
±90° VESA rotation
2.8 lbs.–18.2 lbs. weight capacity *(per arm)*
VESA 75mm/100mm quick release
180° lock-out feature
Includes a grommet mount or a desk clamp mount
Fully assembled for quick installation
Integrated cord management
Integrated tool holder
32.0" max. monitor width *Bezel measured left to right,* *Max width is contingent on weight capacity*
Warranty: 15 yr.

Visit our website for additional specs, dimensional drawings, alternative images and more resources for all of ESI's products.

Monitor arm accessories

Slider mount

VESA slider for Edge and Evolve

$144

MODEL # EDV-SLD-SLV
MODEL # EDV-SLD-BLK
MODEL # EDV-SLD-WHT

9.0" adjustment from left to right
Retrofits with the Edge and Evolve series
Not compatible with the Edge-Max series
Adds an additional 2.2 lbs.
Patented design for exclusive ESI use
Warranty: 15 yr.

Slider mount

VESA slider for Kata

$154

MODEL #KATA-SLD -SLV
MODEL #KATA-SLD -BLK
MODEL #KATA-SLD WHT

9.0" adjustment from left to right
Not compatible with the Edge, Evolve, or Edge-Max series
Adds an additional 1.2 lbs.
Patented design for exclusive ESI use
Available Summer 2019
Warranty: 15 yr.

Thin Client CPU

Monitor arm CPU holder

$246

MODEL # CPU-TC **LT**

Mounts between the monitor arm and monitor
Adjustable width: 1.4"–2.3"
Conforms to VESA 75mm/100mm
Adjustment knobs are vibration resistant
Total weight: 3 lbs.
Warranty: 15 yr.

Monitor arm sold separately

Weighted VESA mount

Universal VESA bracket

$48

MODEL # VESA-HVY-SLV

For use when monitor weight does not meet minimum weight requirement for monitor arm
Adds an additional 2.4 lbs.
Warranty: 15 yr.

VESA 100x200 conversion mount

VESA conversion plates

$30

MODEL # VESA 100X200-SLV

Converts a 75mm or 100mm VESA mount to attach to a 100mm x 200mm VESA display
Warranty: 15 yr.

Benching mount

Monitor arm mount for use with
Knoll® Antenna table

$113
MODEL # E-AMT-SLV

Compatible ESI monitor arms:
Evolve monitor arms: single, dual and triple configurations
Integrated pole
Warranty: 15 yr.

Benching mount

Monitor arm mount for use with
Steelcase® C:SCAPE table

$147
MODEL # E-CMT-SLV

Compatible ESI monitor arms:
Evolve monitor arms: single, dual and triple configurations
Edge and Edge2
Pole sold separately
Warranty: 15 yr.

Benching mount

Monitor arm mount for use with
Steelcase® Frameone table

$133
MODEL # E-FOMT-SLV

Compatible ESI monitor arms:
Evolve monitor arms: Single, dual and triple configurations
Edge (single only)
Pole sold separately
Warranty: 15 yr.

Benching mount

Monitor arm mount for use with
Allsteel® Stride table

$96
MODEL # E-SMT-SLV

Compatible ESI monitor arms:
Evolve monitor arms: single, dual and triple configurations
Edge (single only)
Pole sold separately
Accommodates tops from 1.0"–1.2" thick
Warranty: 15 yr.

Benching mounts are not compatible with all benching systems. Monitor arm configurations are not included with speciality benching mounts. Call our Customer Service Department for compatibility details.

Laptop solutions

Reclaim your workspace

Adaptable for any workspace, laptop solutions save desktop space and cut down on clutter. Double your view when you use your laptop as an additional screen at your workstation. Each is easily adjustable to fit your style, so you can have your work, your way.

Product shown: Tech Dock

Tech Dock

Tech Dock

Sliding tech tray

$137

MODEL # TDOCK-SLV

Stow and go
Gain back up to 25% of your desktop space with this laptop storage solution that easily accommodates a single laptop or a laptop/docking station combo

Glide and swivel
Can swivel 360° under the worksurface for increased accessibility, with or without the glide track attached

Features

15.0" laptop tray width

12.0"–17.0" adjustable depth

17.6" glide track worksurface undermount
Fixed mounting option without glide track

3.5"–5.0" adjustable height below worksurface

360° swivel

20 lbs. weight capacity

Rubber coated grip

Convenient cable access

Warranty: 15 yr.

Product shown: Espree, Edge2Combo, Casters

LTH-Edge / Edge2Combo

LTH-Edge
Adjustable laptop tray

$186

MODEL # LTH-EDGE-SLV
Monitor arm sold separately

Expansion
Accommodates a single laptop or a laptop with docking station

Features
10.3" laptop tray width

12.0"–18.3" adjustable depth

Warranty: 15 yr.

Edge2Combo
Edge2 + LTH-Edge

$850

MODEL # EDGE2COMBO-SLV

Grab and go
The Edge2Combo allows your laptop to function as a second display while maintaining convenient access to dismount and relocate

Features
Finger touch dynamic height adjustment

12.0" height adjustment range
7.0"–19.0" (low/high)

22.0" arm extension

±90° monitor tilt

±90° VESA rotation

6.5 lbs.–17.6 lbs. weight capacity
Monitor supporting arm

1.2 lbs.–12.3 lbs. weight capacity
Laptop supporting arm

VESA quick release

180° lock-out feature

32.0" max. monitor width
Bezel measured left to right,
Max width is contingent on weight capacity

Warranty: 15 yr.

Evolve2Combo / Evolve3Combo

Evolve2Combo

Evolve2FMS + LTH-Edge

$1,072

MODEL # EVOLVE2COMBO-SLV

Features

Finger touch dynamic height adjustment

28.8" arm extension

+80°/-60° monitor tilt

±90° VESA rotation

4.4 lbs.–15.4 lbs. weight capacity
Monitor supporting arm

7 lbs. weight capacity
Laptop supporting arm

18.0" pole height

VESA quick release

180° lock-out feature

32.0" max. monitor width
Bezel measured left to right,
Max width is contingent on weight capacity

Warranty: 15 yr.

Evolve3Combo

Evolve3FMS + LTH-Edge

$1,205

MODEL # EVOLVE3COMBO-SLV

Features

Finger touch dynamic height adjustment

28.8" outside arm extension

6.0" center arm extension

+80°/-60° monitor tilt *(slider mount)*
+45°/-25° monitor tilt *(standard mount)*

±90° VESA rotation

4.4 lbs.–15.4 lbs. weight capacity
Outside monitor supporting arm

0.0 lbs.–20.0 lbs. weight capacity
Middle monitor supporting arm

7 lbs. weight capacity
Laptop supporting arm

18.0" pole height

VESA quick release

180° lock-out feature

28.0" max. monitor width
Bezel measured left to right,
Max width is contingent on weight capacity

Warranty: 15 yr.

Height adjustable tables

Raise the bar, and the table

Keep moving throughout your day with height adjustable tables. Sit or stand options can be quickly and easily tuned to your comfortable height. Adaptable for any workspace, these tables can be used for workstations, individual offices, training rooms, and open environments. Options include electric, pneumatic, and crank bases, with two or three-leg configurations.

Product shown: Triumph-LX, Eppa2, Railway, Pixie LEDX, Solution1, CPU-01, FlexCharge4, Centro

Triumph-LX™

Triumph-LX 2-leg

Electric height adjustable table

Two motors
Includes two motors allowing smooth height adjustment while supporting a broad range of worksurface weights

Cross channels
With adjustable cross channels, the table base can adapt over time with the changing technology and work gear needs of the user

Keypad
Includes a digital keypad with three memory settings

Quality materials
Steel frame and foot construction offers outstanding stability

BIFMA
Exceeds BIFMA x5.5 requirements

Features

Electric height adjustment

220 lbs. base lifting capacity

1.4"/sec. adjustment speed

17.3" height adjustment range
26.1"–43.4" (low/high)
(excluding worksurface)

Two stage adjustable legs

Adjustable width frame

Digital keypad

Soft start

Anti-collision

Locking casters available

Warranty: 15 yr. *(structural)* / 7 yr. *(mechanical)*

Available base finishes

- Silver -SLV
- Black -BLK
- White -WHT

Caster kit
Set of casters for table bases

Increases height by 2.0"

Locking casters for security

$50
MODEL # CASTERKIT-LX-2LEG

Table bases

Available worksurfaces

Table base model	List price	Worksurface shape	Worksurface dimension	TFL Quick ship	TFL Standard	HPL Standard
2T-LX-C28-24-_ _ _	$898	D W Rectangle	36"w x 24"d	–	●	●
			42"w x 24"d	–	●	●
			48"w x 24"d	●	●	●
2T-LX-C40-24-_ _ _	$898		60"w x 24"d	–	●	●
			72"w x 24"d	–	●	●
			84"w x 24"d	–	●	●
2T-LX-C28-30-_ _ _	$898		36"w x 30"d	–	●	●
			42"w x 30"d	–	●	●
			48"w x 30"d	–	●	●
2T-LX-C40-30-_ _ _	$898		60"w x 30"d	●	●	●
			72"w x 30"d	–	●	●

Table base model	List price	Worksurface shape	Worksurface dimension	TFL Quick ship	TFL Standard	HPL Standard
2T-LX-C40-24-_ _ _	$898	W W D D 120°	48”w x 24”d	–	●	●
2T-LX-C40-30-_ _ _	$898		48”w x 30”d	–	–	●

Worksurface Program

Multiple worksurface shapes and laminates are available. See pages 92–95 for worksurface details including pricing and laminate colors. TFL Quick ship worksurfaces are shipped out in 48 hours, TFL and HPL Standard worksurfaces ship in 2–3 weeks.

Table bases and worksurfaces can be purchased independently or as a combination.
ESI worksurfaces are made to exact dimensions. If nominal sizing is needed, please specify when ordering.

2T-LX-C28-24

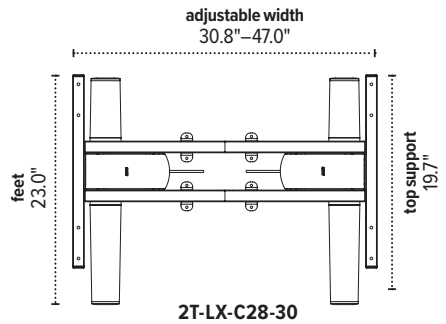

2T-LX-C40-24

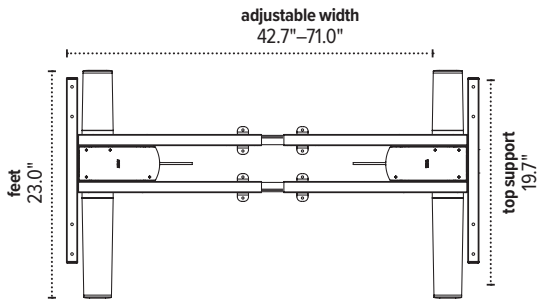

2T-LX-C28-30

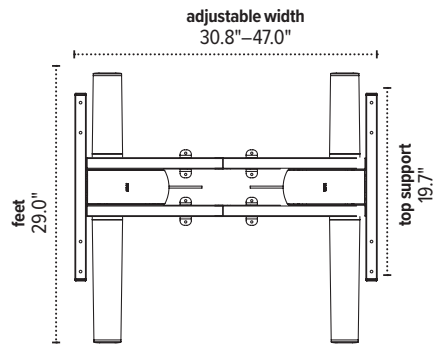

2T-LX-C40-30

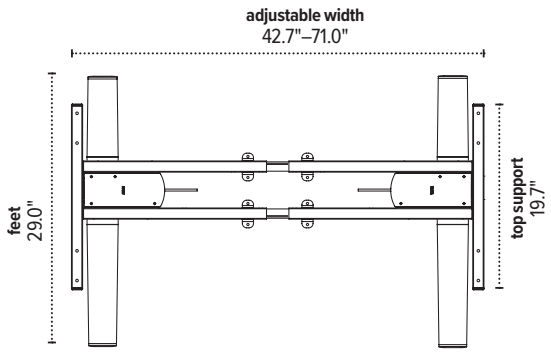

The base dimensions as shown are actual.

Victory-LX™ 2-leg

Victory-LX 2-leg

Electric height adjustable table

Two motors
Includes two motors allowing smooth height adjustment while supporting a broad range of worksurface weights

Cross channels
With adjustable cross channels, the table base can adapt over time with the changing technology and work gear needs of the user

Keypad
Includes a digital keypad with three memory settings

Quality materials
Steel frame and foot construction offers outstanding stability

Height range
Low to high adjustment range meets needs of the largest variety of users. Works with peds and storage with maximum 20 inches of height

BIFMA
Meets or exceeds BIFMA x5.5 requirements. Meets BIFMA GI-2013 ergonomic standards when used with a one inch worksurface

Features

Electric height adjustment

220 lbs. base lifting capacity

1.4"/sec. adjustment speed

26.1" height adjustment range
21.6"–47.7" (low/high)
(excluding worksurface)

Three stage adjustable legs

Adjustable width frame

Digital keypad

Soft start

Anti-collision

Table base is UL962 listed

Locking casters available

Warranty: 15 yr. *(structural)* / 7 yr. *(mechanical)*

Available base finishes

- ○ Silver -SLV
- ● Black -BLK
- ○ White -WHT

Caster kit
Set of casters for table bases

Increases height by 2.0"

Locking casters for security

$50
MODEL # CASTERKIT-LX-2LEG

Table bases

Available worksurfaces

Table baase model	List price	Worksurface shape	Worksurface dimension	TFL Quick ship	TFL Standard	HPL Standard
2VT-LX-C36-24-_ _ _	$1,060	D W Rectangle	36”w x 24”d	–	●	●
			42”w x 24”d	–	●	●
			48’w x 24’d	●	●	●
2VT-LX-C48-24-_ _ _	$1,060		60”w x 24”d	–	●	●
			72”w x24”d	–	●	●
			84”w x 24”d	–	●	●
2VT-LX-C36-30-_ _ _	$1,060		36”w x 30”d	–	●	●
			42”w x 30”d	–	●	●
			48”w x 30”d	–	●	●
2VT-LX-C48-30-_ _ _	$1,060		60”w x 30”d	●	●	●
			72”w x 30”d	–	●	●

Table base model	List price	Worksurface shape	Worksurface dimension	TFL Quick ship	TFL Standard	HPL Standard
2VT-LX-C36-24-_ _ _	$1,060	W W D D 120°	48”w x 24”d	–	●	●
2VT-LX-C48-24-_ _ _	$1,060		60”w x 24”d	–	–	●
			72”w x 24”d	–	–	●
2VT-LX-C36-30-_ _ _	$1,060		48”w x 30”d	–	–	●
2VT-LX-C48-30-_ _ _	$1,060		60”w x 30”d	–	–	●
			72”w x 30”d	–	–	●
				–		

Worksurface Program

Multiple worksurface shapes and laminates are available. See pages 92–95 for worksurface details including pricing and laminate colors. TFL Quick ship worksurfaces are shipped out in 48 hours, TFL and HPL Standard worksurfaces ship in 2–3 weeks.

Table bases and worksurfaces can be purchased independently or as a combination.
ESI worksurfaces are made to exact dimensions. If nominal sizing is needed, please specify when ordering.

2VT-LX-C36-24
adjustable width
30.8"–47.0"

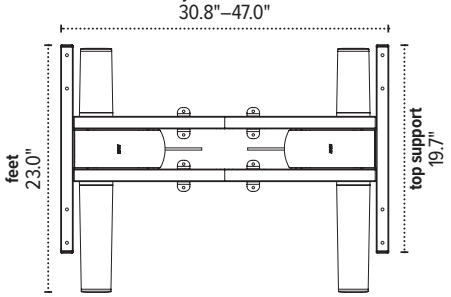

2VT-LX-C48-24
adjustable width
42.7"–71.0"

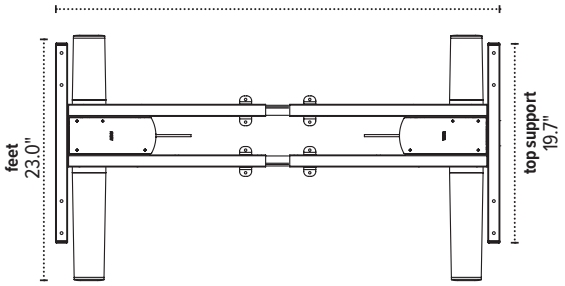

2VT-LX-C36-30
adjustable width
30.8"–47.0"

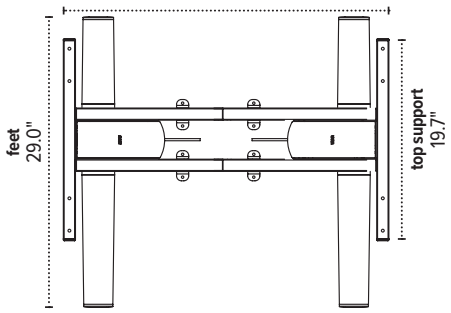

2VT-LX-C48-30
adjustable width
42.7"–71.0"

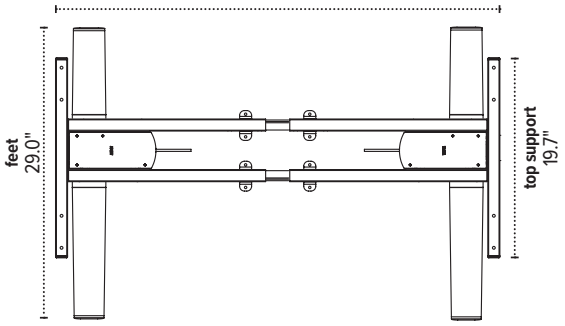

The base dimensions as shown are actual.

Victory-LX™ 3-leg

Victory-LX 3-leg

Electric height adjustable table

Three motors
Includes three motors allowing smooth height adjustment while supporting a broad range of worksurface weights

Cross channels
With adjustable cross channels, the table base can adapt over time with the changing technology and work gear needs of the user

Keypad
Includes a digital keypad with three memory settings

Quality materials
Steel frame and foot construction offers outstanding stability

Height range
Low to high adjustment range meets needs of the largest variety of users. Works with peds and storage with maximum 20 inches of height

Configurations
Can be configured for 90° or 120° with a universal bracket

BIFMA
Meets or exceeds BIFMA x5.5 requirements. Meets BIFMA GI-2013 ergonomic standards when used with a one inch worksurface

Features

Electric height adjustment

330 lbs. base lifting capacity

1.4"/sec. adjustment speed

26.1" height adjustment range
21.6"–47.7" (low/high)
(excluding worksurface)

Three stage adjustable legs

Adjustable width frame

Digital keypad

Soft start

Anti-collision

Table base is UL962 listed

Locking casters available

Warranty: 15 yr. *(structural)* / 7 yr. *(mechanical)*

Available base finishes

- ○ Silver -SLV
- ● Black -BLK
- ○ White -WHT

Caster kit
Set of casters for table bases

Includes third foot for caster installation

Increases height by 2.0"

Locking casters for security

$98
MODEL # CASTERKIT-LX-3LEG-SLV
MODEL # CASTERKIT-LX-3LEG-BLK
MODEL # CASTERKIT-LX-3LEG-WHT

Table bases / Available worksurfaces

Table base model	List price	Worksurface shape	Worksurface dimension	TFL Quick ship	TFL Standard	HPL Standard
3VT-LX-C3636-24-_ _ _	$1,533	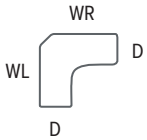 Large Equal Corner	42”wl x 42”wr x 24”d	–	●	●
3VT-LX-C4848-24-_ _ _	$1,533		48”wl x 48”wr x 24”d	–	●	●
			60”wl x 60”wr x 24”d		●	●
			72”wl x 72”wr x 24”d	–	–	●
			84”wl x 84”wr x 24”d	–	–	●
3VT-LX-C4848-30-_ _ _	$1,533		60”wl x 60”wr x 30”d	–	●	●
			72”wl x 72”wr x 30”d	–	–	●
			84”wl x 84”wr x 30”d	–	–	●

Table base model	List price	Worksurface shape	Worksurface dimension	TFL Quick ship	TFL Standard	HPL Standard
3VT-LX-C3636-24-_ _ _	$1,533	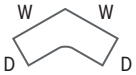 120°	48”w x 24”d	–	●	●
3VT-LX-C4848-24-_ _ _	$1,533		60”w x 24”d	–	–	●
			72”w x 24”d	–	–	●
3VT-LX-C3636-30-_ _ _	$1,533		48”w x 30”d	–	–	●
3VT-LX-C4848-30-_ _ _	$1,533		60”w x 30”d	–	–	●
			72”w x 30”d	–	–	●

Table base model	List price	Worksurface shape	Worksurface dimension	TFL Quick ship	TFL Standard	HPL Standard
3VT-LX-C4836-24-_ _ _	$1,533	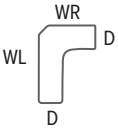 Offset Corner Left	60”wr x 48”wl x 24’d	–	●	●
			72”wl x 48”wr x 24”d	–	●	●
			72”wl x 60”wr x 24”d	–	●	●
3VT-LX-C4848-24-_ _ _	$1,533		84”wl x 48”wr x 24”d	–	●	●
			84”wl x 60”wr x 24”d	–	–	●
3VT-LX-C4836-30-_ _ _	$1,533		60”wl x 48”wr x 30”d	–	●	●
			72”wl x 48”wr x 30”d	–	●	●
			72”wl x 60”wr x 30”d	–	●	●
3VT-LX-C4848-30-_ _ _	$1,533		84”wl x 48”wr x 30”d	–	–	●
			84”wl x 60”wr x 30”d	–	–	●

Table base model	List price	Worksurface shape	Worksurface dimension	TFL Quick ship	TFL Standard	HPL Standard
3VT-LX-C4836-24-_ _ _	$1,533	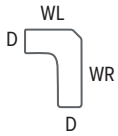 Offset Corner Right	48”wl x 60”wr x 24”d	–	●	●
			48”wl x 72”wr x 24”d	–	●	●
			48”wl x 84”wr x 24”d	–	●	●
3VT-LX-C4848-24-_ _ _	$1,533		60”wl x 72”wr x 24”d	–	●	●
			60”wl x 84”wr x 24”d	–	–	●
3VT-LX-C4836-30-_ _ _	$1,533		48”wl x 60”wr x 30”d	–	●	●
			48”wl x 72”wr x 30”d	–	●	●
			48”wl x 84”wr x 30”d	–	●	●
3VT-LX-C4848-30-_ _ _	$1,533		60”wl x 72”wr x 30”d	–	–	●
			60”wl x 84”wr x 30”d	–	–	●

Worksurface Program

Multiple worksurface shapes and laminates are available. See pages 92–95 for worksurface details including pricing and laminate colors. TFL Quick ship worksurfaces are shipped out in 48 hours, TFL and HPL Standard worksurfaces ship in 2–3 weeks.

Table bases and worksurfaces can be purchased independently or as a combination.
ESI worksurfaces are made to exact dimensions. If nominal sizing is needed, please specify when ordering.

Victory-LX™ 3-leg

3VT-LX-C4836-24
Reversible Configuration

adjustable width
59.1"–82.2"

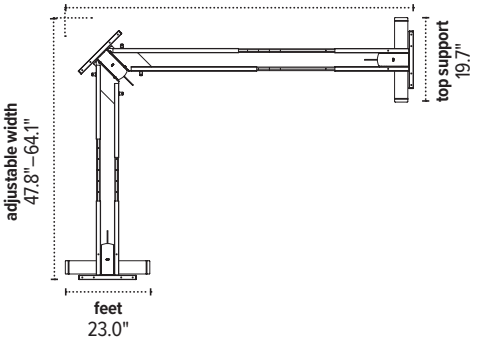

3VT-LX-C4836-30
Reversible Configuration

adjustable width
62.2"–85.3"

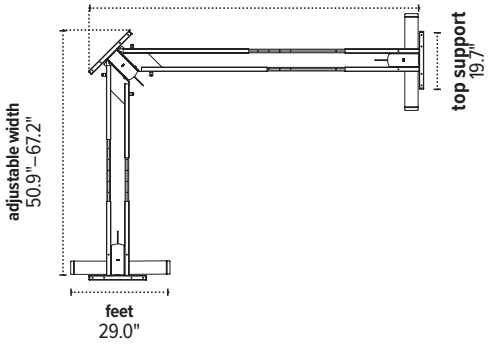

3VT-LX-C3636-24

adjustable width
47.8"–64.1"

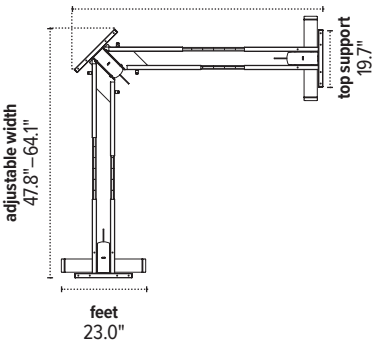

3VT-LX-C3636-30

adjustable width
50.9"–67.2"

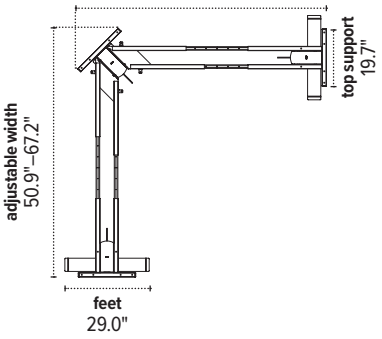

3VT-LX-C4848-24

adjustable width
59.1"–82.2"

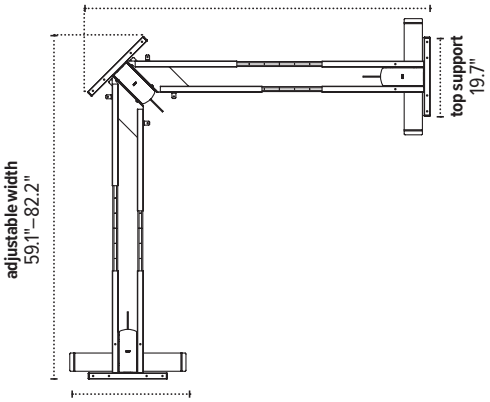

3VT-LX-C4848-30

adjustable width
62.2"–85.3"

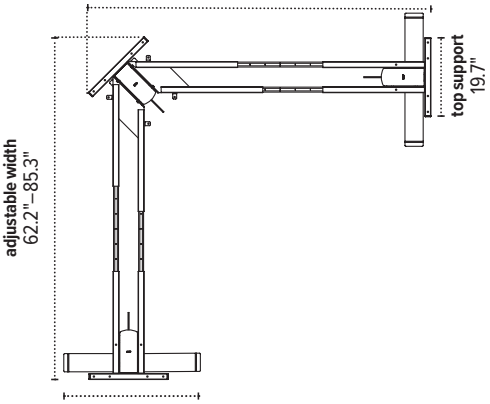

3VT-LX-C3636-24 & 3VT-LX-C3636-30
120° configuration

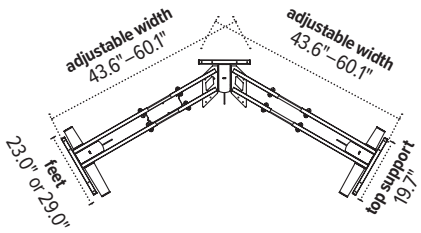

3VT-LX-C4848-24 & 3VT-LX-C4848-30
120° configuration

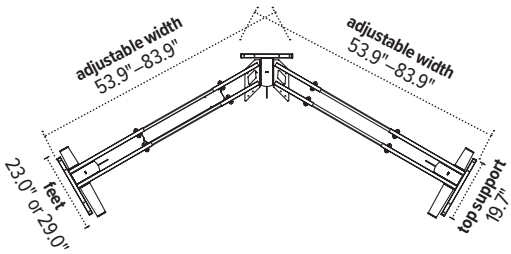

3VT-LX-C4836-24 & 3VT-LX-C4836-30
120° configuration

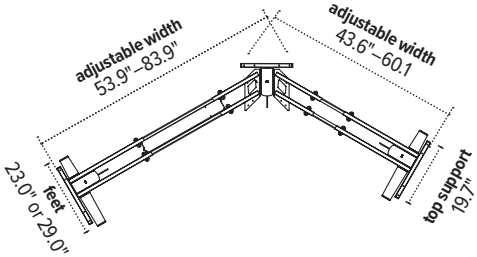

The base dimensions as shown are actual.

Product shown: Victory-LX, Evolve2-FM, Vivid-LEX, Solution 2, CPUMini, FlexCharge4, Conceal, Centro

All-Flex® 2-leg

All-Flex 2-leg
Electric height adjustable table

Two motors
Includes two motors allowing smooth height adjustment while supporting a broad range of worksurface weights

Versatility and flexibility
Provides adjustable cross channels, top support and feet making it one of the most adjustable table bases on the market

One part number
All-Flex uses only one part number for all 2-leg sizes and configurations

Keypad
Includes a digital keypad with four memory settings

Features

Electric height adjustment

265 lbs. base lifting capacity

1.5"/sec. adjustment speed

26.0" height adjustment range
23.2"–49.2" (low/high)
(excluding worksurface)

Three stage adjustable legs

Foot is adjustable to 22.0" or 28.0"
(patented design)

Adjustable width frame

Digital keypad

Soft start

Anti-collision

Table base is UL962 listed

Locking casters available

Warranty: 15 yr. *(structural)* / 7 yr. *(mechanical)*

Available base finishes

Silver -SLV

Black -BLK **LT**

White -WHT **LT**

Caster kit
Set of casters for table bases

Increases height by 2.0"

Locking casters for security

$67
MODEL # CASTERKIT-FLEX2

Table bases / Available worksurfaces

Table base model	List price	Worksurface shape	Worksurface dimension	TFL Quick ship	TFL Standard	HPL Standard
FLEX2-_ _ _	$1,567	Rectangle	36"w x 24"d	_	●	●
			42"w x 24"d	_	●	●
			48"w x 24"d	●	●	●
			60"w x 24"d	_	●	●
			72"w x 24"d	_	●	●
			84"w x 24"d	_	●	●
			36"w x 30"d	_	●	●
			42"w x 30"d	_	●	●
			48"w x 30"d	_	●	●
			60"w x 30"d	●	●	●
			72"w x 30"d	_	●	●

Table base model	List price	Worksurface shape	Worksurface dimension	TFL Quick ship	TFL Standard	HPL Standard
FLEX2-_ _ _	$1,567	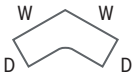 120°	48”w x 24”d	–	●	●
			60”w x 24”d	–	–	●
			72”w x 24”d	–	–	●
			48”w x 30”d	–	–	●
			60”w x 30”d	–	–	●
			72”w x 30”d	–	–	●

Worksurface Program

Multiple worksurface shapes and laminates are available. See pages 92–95 for worksurface details including pricing and laminate colors. TFL Quick ship worksurfaces are shipped out in 48 hours, TFL and HPL Standard worksurfaces ship in 2–3 weeks.

Table bases and worksurfaces can be purchased independently or as a combination.
ESI worksurfaces are made to exact dimensions. If nominal sizing is needed, please specify when ordering.

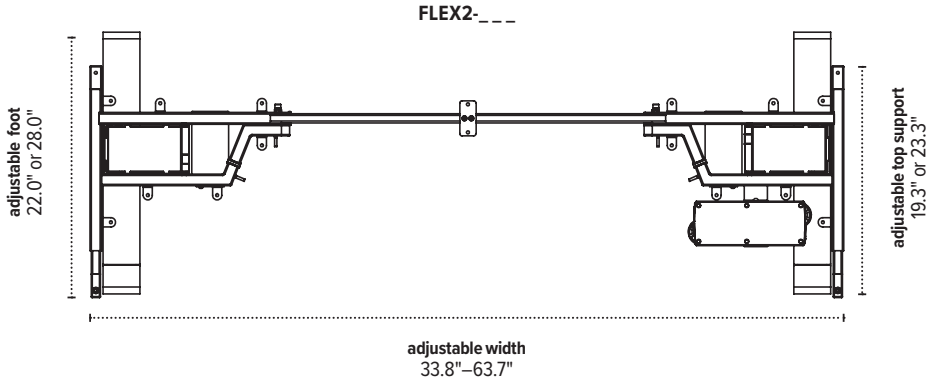

The base dimensions as shown are actual.

All-Flex® 3-leg

All-Flex 3-leg
Electric height adjustable table

Three motors
Includes three motors allowing smooth height adjustment while supporting a broad range of worksurface weights

Versatility and flexibility
Provides adjustable cross channels, top supports and feet making it one of the most adjustable table bases on the market

One part number
All-Flex uses only one part number for all 3-leg sizes and configurations

Keypad
Includes a digital keypad with four memory settings

Configurations
Can be configured for 90° or 120° with a universal bracket

Features

Electric height adjustment

330 lbs. base lifting capacity

1.5"/sec. adjustment speed

26.0" height adjustment range
23.2"–49.2" (low/high)
(excluding worksurface)

Three stage adjustable legs

Foot is adjustable to 22.0" or 28.0"
(patented design)

Adjustable width frame

Digital keypad

Soft start

Anti-collision

Table base is UL962 listed

Locking casters available

Warranty: 15 yr. *(structural)* / 7 yr. *(mechanical)*

Available base finishes

- Silver -SLV
- Black -BLK **LT**
- White -WHT **LT**

Caster kit
Set of casters for table bases

Increases height by 2.0"

Locking casters for security

$84
MODEL # CASTERKIT-FLEX3

Table bases

Available worksurfaces

Table base model	List price	Worksurface shape	Worksurface dimension	TFL Quick ship	TFL Standard	HPL Standard
FLEX3- _ _ _	$2,368	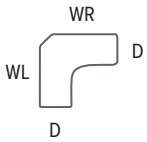 Large Equal Corner	60”wl x 60”wr x 24”d	–	●	●
			72”wl x 72”wr x 24”d	–	–	●
			84”wl x 84”wr x 24”d	–	–	●
			60”wl x 60”wr x 30”d	–	●	●
			72”wl x 72”wr x 30”d	–	–	●
			84”wl x 84”wr x 30”d	–	–	●

Table base model	List price	Worksurface shape	Worksurface dimension	TFL Quick ship	TFL Standard	HPL Standard
FLEX3- _ _ _	$2,368	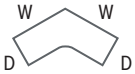 120°	48”w x 24”d	–	●	●
			60”w x 24”d	–	–	●
			72”w x 24”d	–	–	●
			48”w x 30”d	–	–	●
			60”w x 30”d	–	–	●
			72”w x 30”d	–	–	●

Table base model	List price	Worksurface shape	Worksurface dimension	TFL Quick ship	TFL Standard	HPL Standard
FLEX3- _ _ _	$2,368	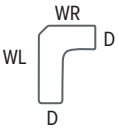 Offset Corner Left	60”wr x 48”wl x 24’d	–	●	●
			72”wl x 48”wr x 24”d	–	●	●
			72”wl x 60”wr x 24”d	–	●	●
			84”wl x 48”wr x 24”d	–	●	●
			84”wl x 60”wr x 24”d	–	–	●
			60”wl x 48”wr x 30”d	–	●	●
			72”wl x 48”wr x 30”d	–	●	●
			72”wl x 60”wr x 30”d	–	●	●
			84”wl x 48”wr x 30”d	–	–	●
			84”wl x 60”wr x 30”d	–	–	●

Table base model	List price	Worksurface shape	Worksurface dimension	TFL Quick ship	TFL Standard	HPL Standard
FLEX3- _ _ _	$2,368	Offset Corner Right	48”wl x 60”wr x 24”d	–	●	●
			48”wl x 72”wr x 24”d	–	●	●
			60”wl x 72”wr x 24”d	–	●	●
			48”wl x 84”wr x 24”d	–	●	●
			60”wl x 84”wr x 24”d	–	–	●
			48”wl x 60”wr x 30”d	–	●	●
			48”wl x 72”wr x 30”d	–	●	●
			60”wl x 72”wr x 30”d	–	●	●
			48”wl x 84”wr x 30”d	–	–	●
			60”wl x 84”wr x 30”d	–	–	●

Worksurface Program

Multiple worksurface shapes and laminates are available. See pages 92–95 for worksurface details including pricing and laminate colors.
TFL Quick ship worksurfaces are shipped out in 48 hours, TFL and HPL Standard worksurfaces ship in 2–3 weeks.

Table bases and worksurfaces can be purchased independently or as a combination.
ESI worksurfaces are made to exact dimensions. If nominal sizing is needed, please specify when ordering.

All-Flex® 3-leg

90° Configuration

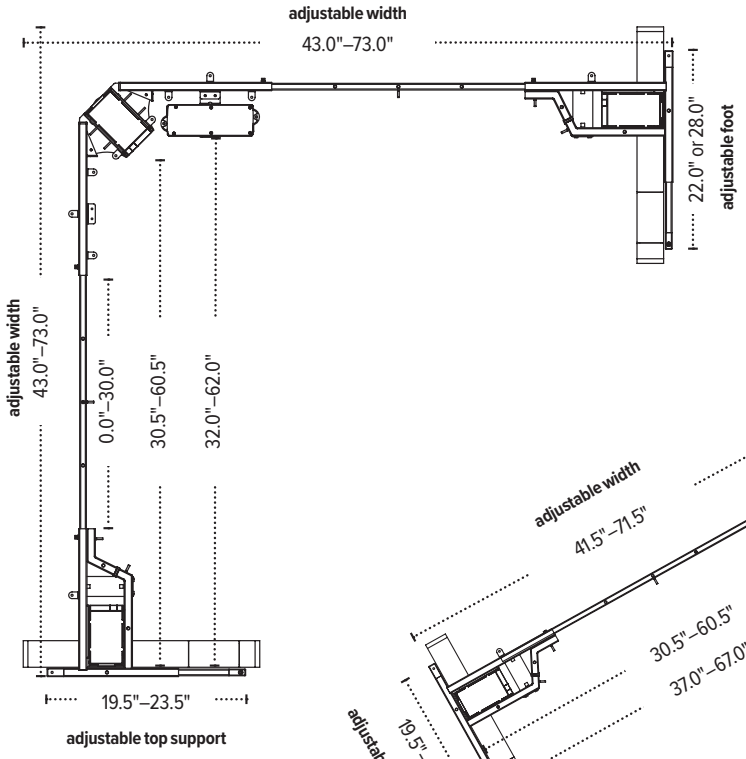

120° Configuration

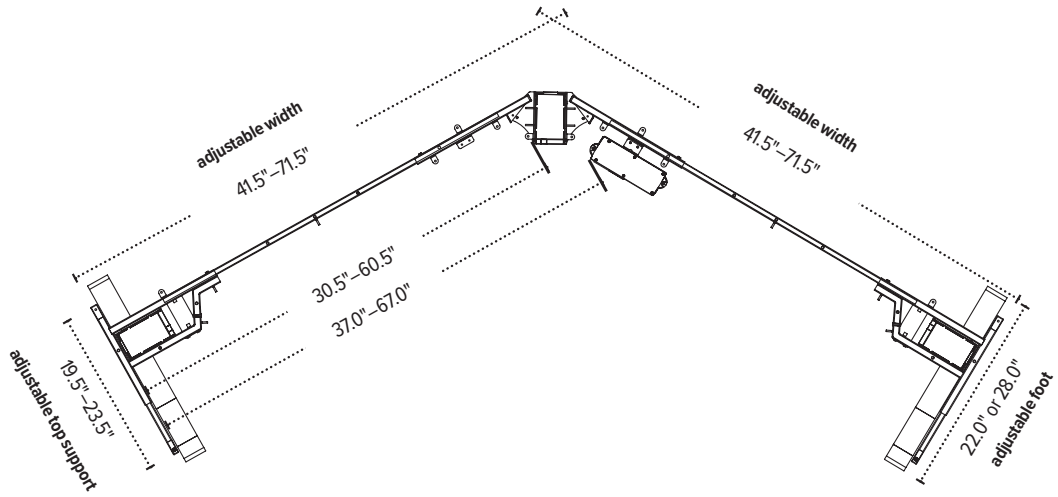

Side view

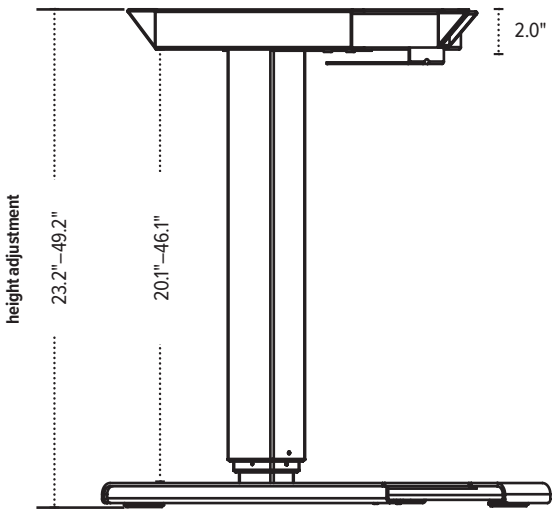

The base dimensions as shown are actual.

Product shown: All-Flex 3-leg, Evolve2-M, Solution Ultra, CPU05, FlexCharge4, Lustre, Conceal

Electric table bases

Triumph-LX™

Electric height adjustable table

$898

Victory-LX™ 2-leg

Electric height adjustable table

$1,060

Victory-LX™ 3-leg

Electric height adjustable table

$1,533

MODEL #2T-LX-_ _ _	MODEL #2VT-LX-_ _ _	MODEL #3VT-LX-_ _ _
○ Silver -SLV	○ Silver -SLV	○ Silver -SLV
● Black -BLK	● Black -BLK	● Black -BLK
○ White -WHT	○ White -WHT	○ White -WHT
Electric height adjustment	Electric height adjustment	Electric height adjustment
220 lbs. base lifting capacity	220 lbs. base lifting capacity	330 lbs. base lifting capacity
1.4"/sec. adjustment speed	1.4"/sec. adjustment speed	1.4"/sec. adjustment speed
17.3" height adjustment range 26.1"–43.4" (low/high) *(excluding worksurface)*	26.1" height adjustment range 21.6"–47.7" (low/high) *(excluding worksurface)*	26.1" height adjustment range 21.6"–47.7" (low/high) *(excluding worksurface)*
Two stage adjustable legs	Three stage adjustable legs	Three stage adjustable legs
–	–	–
Adjustable width frame	Adjustable width frame	Adjustable width frame
Digital keypad	Digital keypad	Digital keypad
Soft start	Soft start	Soft start
Anti-collision	Anti-collision	Anti-collision
	Table base is UL962 listed	Table base is UL962 listed
Locking casters available	Locking casters available	Locking casters available
Warranty: 15 yr. *(structural)* / 7 yr. *(mechanical)*	Warranty: 15 yr. *(structural)* / 7 yr. *(mechanical)*	Warranty: 15 yr. *(structural)* / 7 yr. *(mechanical)*
–	–	–
Reference pages 93–94 for worksurfaces price lists	*Reference pages 93–94 for worksurfaces price lists*	*Reference pages 93–94 for worksurfaces price lists*

Visit our website for additional specs, dimensional drawings, alternative images and more resources for all of ESI's products.

All-Flex® 2-leg

Electric height adjustable table

$1,567

MODEL # FLEX2- _ _ _

- Silver -SLV
- Black -BLK **LT**
- White -WHT **LT**

Electric height adjustment
265 lbs. base lifting capacity
1.5"/sec. adjustment speed
26.0" height adjustment range 23.2"–49.2" (low/high) *(excluding worksurface)*
Three stage adjustable legs
Foot is adjustable to 22.0" or 28.0" (patented design)
Adjustable width frame
Digital keypad
Soft start
Anti-collision
Table base is UL962 listed
Locking casters available
Warranty: 15 yr. *(structural)* / 7 yr. *(mechanical)*
GSA
Reference pages 93–94 for worksurfaces price lists

All-Flex® 3-leg

Electric height adjustable table

$2,368

MODEL #FLEX3-_ _ _

- Silver -SLV
- Black -BLK **LT**
- White -WHT **LT**

Electric height adjustment
330 lbs. base lifting capacity
1.5"/sec. adjustment speed
26.0" height adjustment range 23.2"–49.2" (low/high) *(excluding worksurface)*
Three stage adjustable legs
Foot is adjustable to 22.0" or 28.0" (patented design)
Adjustable width frame
Digital keypad
Soft start
Anti-collision
Table base is UL962 listed
Locking casters available
Warranty: 15 yr. *(structural)* / 7 yr. *(mechanical)*
GSA
Reference pages 93–94 for worksurfaces price lists

Espree™

Espree
Pneumatic height adjustable table

Environmentally friendly
With no power needed, it is both environmentally friendly and easy to retrofit any space with power limitations

Adjustable feet
Feet adjust to 22 or 28 inches long with a removable plate which accommodates worksurfaces 24 through 36 inches deep

Safety feature
The weight adjustment cylinder includes a preventive hard stop

Features
Pneumatic height adjustment

38 lbs.–83 lbs. base lifting capacity (2ESP-C48-ADJ)
49 lbs.–94 lbs. base lifting capacity (2ESP-C60-ADJ)

19.6" height adjustment range
26.2"–45.8" (low/high)
(excluding worksurface)

Two stage adjustable legs

Foot is adjustable to 22.0" or 28.0"
(patented design)

Fixed width frame

Locking casters available

For weight adjustability, see information on the Weight Adjustable Espree on page 86

Warranty: 15 yr. *(structural)* / 7 yr. *(mechanical)*

Available base finishes

Silver -SLV

Black -BLK **LT**

White -WHT **LT**

Caster kit
Set of casters for table bases

Increases height by 2.0"

Locking casters for security

$67
MODEL # CASTERKIT-2ESP

Table bases

Table base model	List price
3ESP-C48-ADJ- _ _ _	$1,766
3ESP-C60-ADJ- _ _ _	$1,803

Available worksurfaces

Worksurface shape	Worksurface dimension	TFL Quick ship	TFL Standard	HPL Standard
Rectangle	48"w x 24"d	●	●	●
	48"w x 30"d	_	●	●
	60"w x 24"d	_	●	●
	60"w x 30"d	●	●	●

Table base model	List price
3ESP-C48-ADJ- _ _ _	$1,766
3ESP-C60-ADJ- _ _ _	$1,803

Worksurface shape	Worksurface dimension	TFL Quick ship	TFL Standard	HPL Standard
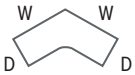 120°	48”w x 24”d	–	●	●
	48”w x 30”d	–	–	●
	60”w x 24”d	–	–	●
	60”w x 30”d	–	–	●

Worksurface Program

Multiple worksurface shapes and laminates are available. See pages 92–95 for worksurface details including pricing and laminate colors. TFL Quick ship worksurfaces are shipped out in 48 hours, TFL and HPL Standard worksurfaces ship in 2–3 weeks.

Table bases and worksurfaces can be purchased independently or as a combination.
ESI worksurfaces are made to exact dimensions. If nominal sizing is needed, please specify when ordering.

2ESP-C48-ADJ

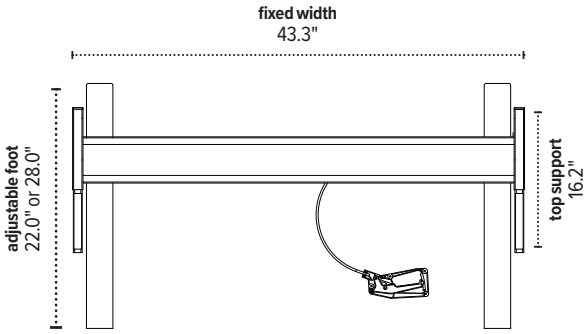

2ESP-C60-ADJ

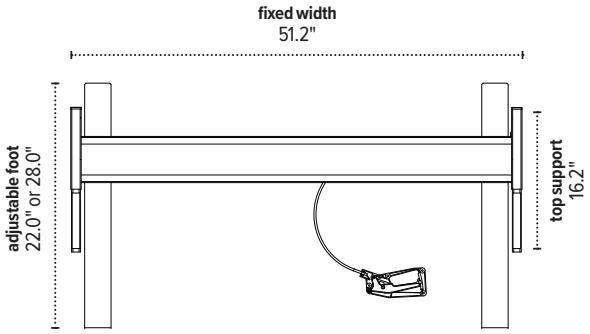

The base dimensions as shown are actual.

Weight Adjustable Espree™

Weight Adjustable Espree

Pneumatic height adjustable table

Environmentally friendly
With no power needed, it is both environmentally friendly and easy to retrofit any space with power limitations

Adjustable feet
Feet adjust to 22 or 28 inches long with a removable plate which accommodates worksurfaces 24 through 36 inches deep

Weight resistance gauge
The user has the ability to change the weight resistance in the base for easy height adjustment

Features

Pneumatic height adjustment

44 lbs.–143 lbs. base lifting capacity (2ESP-WA-C48)
52 lbs.–163 lbs. base lifting capacity (2ESP-WA-C60)

20.0" height adjustment range
26.0"–46.0" (low/high)
(excluding worksurface)

Two stage adjustable legs

Foot is adjustable to 22.0" or 28.0" (patented design)

Fixed width frame

Weight adjustable with adjustment gauge

Locking casters available

Warranty: 15 yr. *(structural)* / 7 yr. *(mechanical)*

Available base finishes

- Silver -SLV
- Black -BLK **LT**
- White -WHT **LT**

Caster kit
Set of casters for table bases

Increases height by 2.0"

Locking casters for security

$67
MODEL # CASTERKIT-ESP-WA

Table bases

Table base model	List price
2ESP-WA-C48- _ _ _	$2,007
2ESP-WA-C60- _ _ _	$2,084

Available worksurfaces

Worksurface shape	Worksurface dimension	TFL Quick ship	TFL Standard	HPL Standard
Rectangle	48"w x 24"d	●	●	●
	48"w x 30"d	_	●	●
	60"w x 24"d	_	●	●
	60"w x 30"d	●	●	●

Table base model	List price
2ESP-WA-C48- _ _ _	$2,007
2ESP-WA-C60- _ _ _	$2,084

Worksurface shape	Worksurface dimension	TFL Quick ship	TFL Standard	HPL Standard
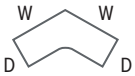 120°	48”w x 24”d	–	●	●
	48”w x 30”d	–	–	●
	60”w x 24”d	–	–	●
	60”w x 30”d	–	–	●

Worksurface Program

Multiple worksurface shapes and laminates are available. See pages 92–95 for worksurface details including pricing and laminate colors.
TFL Quick ship worksurfaces are shipped out in 48 hours, TFL and HPL Standard worksurfaces ship in 2–3 weeks.

Table bases and worksurfaces can be purchased independently or as a combination.

ESI worksurfaces are made to exact dimensions. If nominal sizing is needed, please specify when ordering.

2ESP-WA-C48

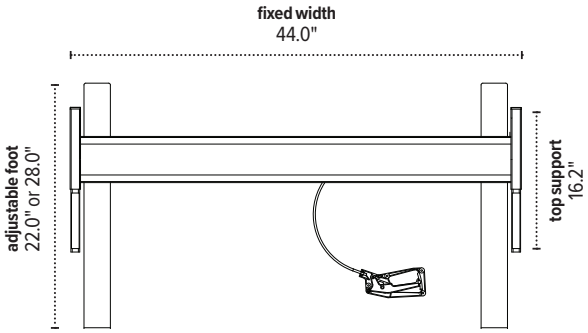

2ESP-WA-C60

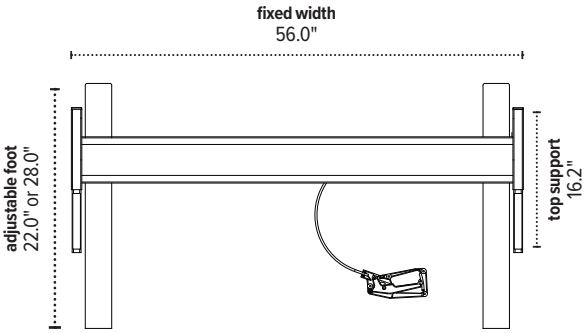

The base dimensions as shown are actual.

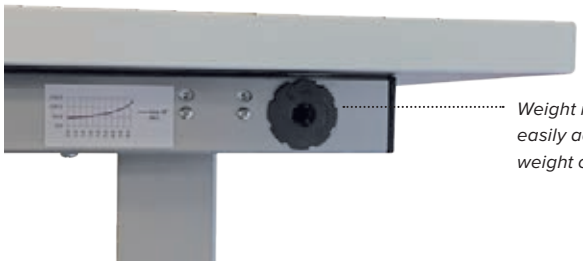

Weight resistance gauge easily adjusts according to weight of worksurface

Q Crank

Q Crank
Crank height adjustable table

Environmentally friendly
With no power needed, it is both environmentally friendly and easy to retrofit any space with power limitations

Hand crank
Fold the hand crank under the worksurface when not in use

Features
Crank height adjustment

220 lbs. base lifting capacity

1.0" per two cranks adjustment speed

17.7" height adjustment range
24.8"–42.5" (low/high)
(excluding worksurface)

Two stage adjustable legs

Adjustable width frame

Locking casters available

Warranty: 15 yr. *(structural)* / 7 yr. *(mechanical)*

Available base finishes

Silver -SLV

Black -BLK **LT**

Caster kit
Set of casters for table bases

Increases height by 2.0"

Locking casters for security

$67
MODEL # CASTERKIT-QCRANK

Table bases

Table base model	List price
QCRANK-24S-_ _ _	$878
QCRANK-24L-_ _ _	$878
QCRANK-30S-_ _ _	$878
QCRANK-30L-_ _ _	$878

Available worksurfaces

Worksurface shape	Worksurface dimension	TFL Quick ship	TFL Standard	HPL Standard
D W Rectangle	36"w x 24"d	_	●	●
	42"w x 24"d	_	●	●
	48"w x 24"d	●	●	●
	60"w x 24"d	_	●	●
	72"w x 24"d	_	●	●
	84"w x 24"d	_	●	●
	36"w x 30"d	_	●	●
	42"w x 30"d	_	●	●
	48"w x 30"d	_	●	●
	60"w x 30"d	●	●	●
	72"w x 30"d	_	●	●

Worksurface Program

Multiple worksurface shapes and laminates are available. See pages 92–95 for worksurface details including pricing and laminate colors. TFL Quick ship worksurfaces are shipped out in 48 hours, TFL and HPL Standard worksurfaces ship in 2–3 weeks.

Table bases and worksurfaces can be purchased independently or as a combination.
ESI worksurfaces are made to exact dimensions. If nominal sizing is needed, please specify when ordering.

Q CRANK-24S

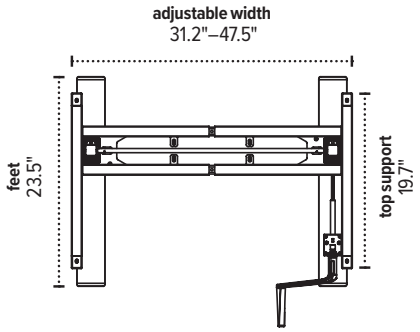

Q CRANK-30S

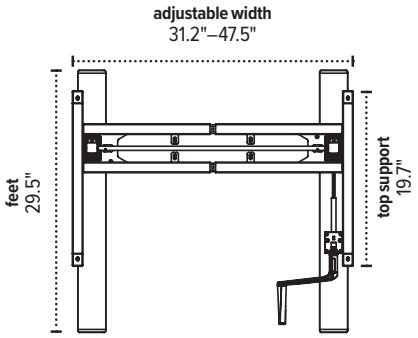

Q CRANK-24L

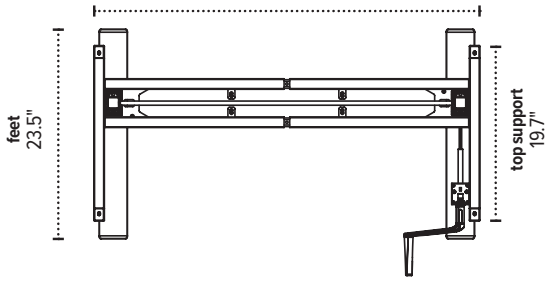

Q CRANK-30L

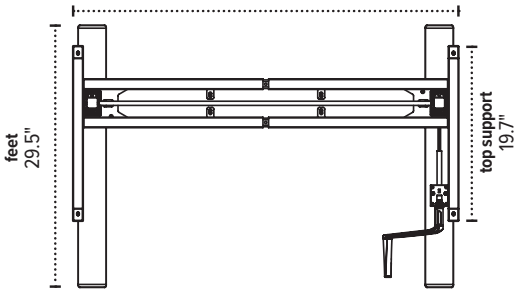

The base dimensions as shown are actual.

Manual table bases

Espree™

Pneumatic height adjustable table

$1,766 *MODEL # 2ESP-C48-ADJ-_ _ _*
$1,803 *MODEL # 2ESP-C60-ADJ-_ _ _*

MODEL # 2ESP-C48-ADJ-_ _ _
MODEL # 2ESP-C60-ADJ-_ _ _

- Silver -SLV
- Black -BLK **LT**
- White -WHT **LT**

Pneumatic height adjustment
38–83 lbs. base lifting capacity *(model 2ESP-C48-ADJ)* 49–94 lbs. base lifting capacity *(model 2ESP-C60-ADJ)*
–
19.6" height adjustment range 26.2"–45.8" (low/high) *(excluding worksurface)*
Two stage adjustable legs
Foot is adjustable to 22.0" or 28.0"
Fixed width frame
Locking casters available
–
Warranty: 15 yr. *(structural)* / 7 yr. *(mechanical)*
GSA
Reference pages 93–94 for worksurfaces price lists

Weight Adjustable Espree™

Pneumatic height adjustable table

$2,007 *MODEL # 2ESP-WA-C48-_ _ _*
$2,084 *MODEL # 2ESP-WA-C60-_ _ _*

MODEL # 2ESP-WA-C48- _ _ _
MODEL # 2ESP-WA-C60- _ _ _

- Silver -SLV
- Black -BLK **LT**
- White -WHT **LT**

Pneumatic height adjustment
44–143 lbs. base lifting capacity *(model 2ESP-WA-C48)* 52–163 lbs. base lifting capacity *(model 2ESP-WA-C60)*
–
20.0" height adjustment range 26.0"–46.0" (low/high) *(excluding worksurface)*
Two stage adjustable legs
Foot is adjustable to 22.0" or 28.0"
Fixed width frame
Locking casters available
Weight Adjustable
Warranty: 15 yr. *(structural)* / 7 yr. *(mechanical)*
GSA
Reference pages 93–94 for worksurfaces price lists

Q Crank

Crank height adjustable table

$878

MODEL # QCRANK-24S-_ _ _
MODEL # QCRANK-24L-_ _ _
MODEL # QCRANK-30S-_ _ _
MODEL # QCRANK-30L-_ _ _

- Silver -SLV
- Black -BLK **LT**

Crank height adjustment
220 lbs. base lifting capacity
1.0" per two cranks adjustment speed
17.7" height adjustment range 24.8"–42.5" (low/high) *(excluding worksurface)*
Two stage adjustable legs
–
Adjustable width frame
Locking casters available
–
Warranty: 15 yr. *(structural)* / 7 yr. *(mechanical)*
–
Reference pages 93–94 for worksurfaces price lists

Visit our website for additional specs, dimensional drawings, alternative images and more resources for all of ESI's products.

Product shown: Weight Adjustable Espree, Edge2-MS, Solution All-Fit, Lustre, FlexCharge4, CPU05

Product shown: Q Crank, Casters, Birdi, WOW

Worksurfaces Overview

How to order:

Worksurfaces have multiple part numbers based on worksurface dimensions.

There are 6 Thermally Fused Laminate (TFL) colors and 30 High Pressure Laminate (HPL) colors. See page 95 for more details.

Use the worksurface code with the two letter color code to complete your part number

Part number breakdown:

1. Pick your worksurface and size

2R4224-TFL-WW

2. Pick your laminate finish

2R4224-TFL-WW

2R4224-TFL-WW

This product number represents:
Rectangle shape
42.0" wide and 24.0" deep
TFL Standard
White white Uniboard laminate

General information

Worksurfaces
Worksurfaces can be sold separately or in combination with a table base.

Warranty: 5 yr.

Sizing
ESI worksurfaces are made to exact dimensions. If nominal sizing is needed, please specify when ordering. Standard thickness is 1.0"

Lead times
TFL Quick ship: 48 hours
TFL Standard: 2–3 weeks
HPL Standard: 2–3 weeks

Edge detail
Worksurfaces ship with standard square edge profile and coordinating 3mm edge band. Alternative edge detail options are available at additional cost.

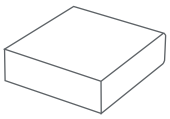

Square edge

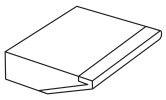

Knife edge

Laminate materials

Worksurfaces are available in select laminate options. ESI worksurfaces are either Thermally Fused Laminates or High Pressure Laminates. Please indicate laminate choice by adding the 2-letter code at the end of the worksurface model number.

Thermally Fused Laminates (TFL)
Worksurfaces consist of a single printed decor paper fused directly by heat and pressure to the core material of MDF or particle board.

TFL Benefits: Cost efficient, consistent and uniform, water resistant, scratch resistant

High Pressure Laminates (HPL)
Worksurfaces consist of a melamine treated printed decor paper fused to multiple sheets of kraft paper. Heat and pressure bond all the sheets together creating a flexible and durable piece of plastic type material which is then adhered to MDF or particle board.

HPL Benefits: Durable, versatile, stylish, heat resistant, water resistant, scratch resistant, impact resistant, hygienic qualities

Custom options

For more information on alternative worksurfaces shapes, thickness, edge details and laminate options, contact the Customer Service Department. Additional costs may apply.

TFL Quick Ship Worksurfaces

TFL Quick ship worksurfaces ship within 48 hours and are available in six colors.
Please see page 95 for the laminate finishes that are available.

Worksurface pricing:

Rectangle

Surface model	List price	Dimensions
2R4824-QS-TFL-_ _	$250	48” w x 24”d
2R6030-QS-TFL-_ _	$350	60”w x 30”d

TFL Standard Worksurfaces

TFL standard worksurfaces ship within three weeks and are available in six colors.
Please see page 95 for the laminate options that are available.

Worksurface pricing:

Rectangle

Surface model	List price	Dimensions
2R3624-TFL-_ _	$195	36”w x 24”d
2R4224-TFL-_ _	$220	42”w x 24”d
2R4824-TFL-_ _	$250	48”w x 24”d
2R6024-TFL-_ _	$300	60”w x 24”d
2R7224-TFL-_ _	$375	72”w x 24”d
2R8424-TFL-_ _	$420	84”w x 24”d
2R3630-TFL-_ _	$210	36”w x 30”d
2R4230-TFL-_ _	$230	42”w x 30”d
2R4830-TFL-_ _	$275	48”w x 30”d
2R6030-TFL-_ _	$350	60”w x 30”d
2R7230-TFL-_ _	$400	72”w x 30”d

120 degree

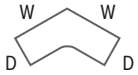

Surface model	List price	Dimensions
120-4824-TFL-_ _	$815	48”w x 24”d

Equal Corner

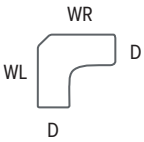

Surface model	List price	Dimensions
2EC424224-TFL-_ _	$660	42”wl x 42”wr x 24”d
2EC484824-TFL-_ _	$670	48”wl x 48”wr x 24”d
3EC606024-TFL-_ _	$980	60”wl x 60”wr x 24”d
3EC606030-TFL-_ _	$1,000	60”wl x 60”wr x 30”d

Offset Corner Left

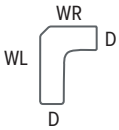

Surface model	List price	Dimensions
3OCL604824-TFL-_ _	$875	60”wl x 48”wr x 24”d
3OCL724824-TFL-_ _	$955	72”wl x 48”wr x 24”d
3OCL726024-TFL-_ _	$1,090	72”wl x 60”wr x 24”d
3OCL844824-TFL-_ _	$1,125	84”wl x 48”wr x 24”d
3OCL604830-TFL-_ _	$890	60”wl x 48”wr x 30”d
3OCL724830-TFL-_ _	$965	72”wl x 48”wr x 30”d
3OCL726030-TFL-_ _	$1,100	72”wl x 60”wr x 30”d

Offset Corner Right

Surface model	List price	Dimensions
3OCR486024-TFL-_ _	$875	48”wl x 60”wr x 24”d
3OCR487224-TFL-_ _	$955	48”wl x 72”wr x 24”d
3OCR607224-TFL-_ _	$1,090	60”wl x 72”wr x 24”d
3OCR488424-TFL-_ _	$1,125	48”wl x 84”wr x 24”d
3OCR486030-TFL-_ _	$890	48”wl x 60”wr x 30”d
3OCR487230-TFL-_ _	$965	48”wl x 72”wr x 30”d
3OCR607230-TFL-_ _	$1,100	60”wl x 72”wr x 30”d

Table bases and worksurfaces can be purchased independently or as a combination.
ESI worksurfaces are made to exact dimensions. If nominal sizing is needed, please specify when ordering.

HPL Standard Worksurfaces

HPL standard worksurfaces ship within three weeks and are available in 30 colors.
Please see page 95 for the laminate options that are available.

Worksurface pricing:

Rectangle

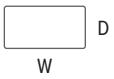

Surface model	List price	Dimensions
2R3624-HPL-_ _	$273	36”w x 24”d
2R4224-HPL-_ _	$315	42”w x 24”d
2R4824-HPL-_ _	$350	48”w x 24”d
2R6024-HPL-_ _	$420	60”w x24”d
2R7224-HPL-_ _	$460	72”w x 24”d
2R8424-HPL-_ _	$500	84”w x 24”d
2R3630-HPL-_ _	$300	36”w x 30”d
2R4230-HPL-_ _	$330	42”w x 30”d
2R4830-HPL-_ _	$380	48”w x 30”d
2R6030-HPL-_ _	$440	60”w x 30”d
2R7230-HPL-_ _	$480	72”w x 30”d

120 degree

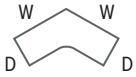

Surface model	List price	Dimensions
120-4824-HPL-_ _	$1,141	48”w x 24”d
120-6024-HPL-_ _	$1,605	60”w x 24”d
120-7224-HPL-_ _	$1,800	72”w x 24”d
120-4830-HPL-_ _	$1,295	48”w x 30”d
120-6030-HPL-_ _	$1,625	60”w x 30”d
120-7230-HPL-_ _	$1,825	72”w x 30”d

Equal Corner

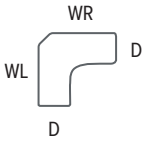

Surface model	List price	Dimensions
2EC424224-HPL-_ _	$726	42”wl x 42”wr x 24”d
2EC484824-HPL-_ _	$737	48”wl x 48”wr x 24”d
3EC606024-HPL-_ _	$1,078	60”wl x 60”wr x 24”d
3EC727224-HPL-_ _	$2,000	72”wl x 72”wr x 24”d
3EC848424-HPL-_ _	$2,200	84”wl x 84”wr x 24”d
3EC606030-HPL-_ _	$1,100	60”wl x 60”wr x 30”d
3EC727230-HPL-_ _	$2,150	72”wl x 72”wr x 30”d
3EC848430-HPL-_ _	$2,250	84”wl x 84”wr x 30”d

Offset Corner Left

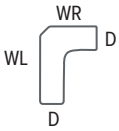

Surface model	List price	Dimensions
3OCL604824-HPL-_ _	$963	60”wr x 48”wl x 24’d
3OCL724824-HPL-_ _	$1,051	72”wl x 48”wr x 24”d
3OCL844824-HPL-_ _	$1,199	84”wl x 48”wr x 24”d
3OCL726024-HPL-_ _	$1,300	72”wl x 60”wr x 24”d
3OCL846024-HPL-_ _	$1,400	84”wl x 60”wr x 24”d
3OCL604830-HPL-_ _	$979	60”wl x 48”wr x 30”d
3OCL724830-HPL-_ _	$1,062	72”wl x 48”wr x 30”d
3OCL844830-HPL-_ _	$1,250	84”wl x 48”wr x 30”d
3OCL726030-HPL-_ _	$1,320	72”wl x 60”wr x 30”d
3OCL846030-HPL-_ _	$1,420	84”wl x 60”wr x 30”d

Offset Corner Right

Surface model	List price	Dimensions
3OCR486024-HPL-_ _	$963	48”wl x 60”wr x 24”d
3OCR487224-HPL-_ _	$1,051	48”wl x 72”wr x 24”d
3OCR488424-HPL-_ _	$1,199	48”wl x 84”wr x 24”d
3OCR607224-HPL-_ _	$1,300	60”wl x 72”wr x 24”d
3OCR608424-HPL-_ _	$1,400	60”wl x 84”wr x 24”d
3OCR486030-HPL-_ _	$979	48”wl x 60”wr x 30”d
3OCR487230-HPL-_ _	$1,062	48”wl x 72”wr x 30”d
3OCR488430-HPL-_ _	$1,250	48”wl x 84”wr x 30”d
3OCR607230-HPL-_ _	$1,320	60”wl x 72”wr x 30”d
3OCR608430-HPL-_ _	$1,420	60”wl x 84”wr x 30”d

Table bases and worksurfaces can be purchased independently or as a combination.
ESI worksurfaces are made to exact dimensions. If nominal sizing is needed, please specify when ordering.

Laminates

TFL options: *Available for TFL Quick ship or TFL Standard worksurfaces*

Solids

Color code: **WW**
Color name: White White
Finish: Dolomite matte
Manufacturer: Uniboard

Color code: **SG**
Color name: Sunset Grey
Finish: Dolomite matte
Manufacturer: Uniboard

Color code: **CG**
Color name: Canadian Grey
Finish: Dolomite matte
Manufacturer: Uniboard

Color code: **WG**
Color name: Willow Grey
Finish: Dolomite matte
Manufacturer: Uniboard

Patterns

Color code: **AC**
Color name: Acacia
Finish: Dolomite matte
Manufacturer: Uniboard

Color code: **SO**
Color name: Shadow Oak
Finish: Dolomite matte
Manufacturer: Uniboard

HPL options: *Available for HPL Standard worksurfaces*

Solids

Color code: **DW**
Color name: 7197-58 Dover White
Finish: Matte
Manufacturer: Formica

Color code: **BW**
Color name: 459-58 Brite White
Finish: Matte
Manufacturer: Formica

Color code: **AW**
Color name: 932-58 Antique White
Finish: Matte
Manufacturer: Formica

Color code: **GS**
Color name: 464-58 Graystone
Finish: Matte
Manufacturer: Formica

Color code: **FL**
Color name: Folkstone 927-58
Finish: Matte
Manufacturer: Formica

Color code: **FG**
Color name: 961-58 Fog
Finish: Matte
Manufacturer: Formica

Color code: **FX**
Color name: 1994-58 Fox
Finish: Matte
Manufacturer: Formica

Color code: **GP**
Color name: 837-58 Graphite
Finish: Matte
Manufacturer: Formica

Color code: **NC**
Color name: 5323-58 Nocturne
Finish: Matte
Manufacturer: Formica

Color code: **BK**
Color name: 909-58 Black
Finish: Matte
Manufacturer: Formica

Patterns

Color code: **NM**
Color name: 756-58 Natural Maple
Finish: Matte
Manufacturer: Formica

Color code: **HM**
Color name: 86992-58 Hardrock Maple
Finish: Matte
Manufacturer: Formica

Color code: **BC**
Color name: 758-58 Blossom Cherrywood
Finish: Matte
Manufacturer: Formica

Color code: **WR**
Color name: 9283-NG Walnut Riftwood
Finish: Natural Grain
Manufacturer: Formica

Color code: **FT**
Color name: 8907-NG Fox Teakwood
Finish: Natural Grain
Manufacturer: Formica

Color code: **BR**
Color name: 6414-NG Black Riftwood
Finish: Natural Grain
Manufacturer: Formica

Color code: **WW**
Color name: 8902-NG White Painted Wood
Finish: Natural Grain
Manufacturer: Formica

Color code: **NW**
Color name: 5875-58 Natural Weft
Finish: Matte
Manufacturer: Formica

Color code: **WT**
Color name: 9285-58 White Twill
Finish: Matte
Manufacturer: Formica

Color code: **NC**
Color name: 6314-58 Neo Cloud Neo Cloud
Finish: Matte
Manufacturer: Formica

Color code: **CF**
Color name: 6362-NT Concrete Formwood
Finish: Naturelle
Manufacturer: Formica

Color code: **ST**
Color name: 8827-58 Sarun Twill
Finish: Matte
Manufacturer: Formica

Color code: **CW**
Color name: 5884-58 Chestnut Woodline
Finish: Matte
Manufacturer: Formica

Color code: **WS**
Color name: 6306-58 Wenge Strand
Finish: Matte
Manufacturer: Formica

Color code: **CF**
Color name: 6416-NT Charred Formwood
Finish: Naturelle
Manufacturer: Formica

Color code: **EC**
Color name: 8830-58 Elemental Concrete
Finish: Matte
Manufacturer: Formica

Color code: **CW**
Color name: 5882-58 Citadel Warp
Finish: Matte
Manufacturer: Formica

Color code: **BS**
Color name: 6307-58 Burnt Strand
Finish: Matte
Manufacturer: Formica

Color code: **EO**
Color name: 299-58 Ebony Oxide
Finish: Matte
Manufacturer: Formica

Color code: **BS**
Color name: 8918-58 Blackened Steel
Finish: Matte
Manufacturer: Formica

Product shown: Centro, Edge, All-Flex 3-leg, FlexCharge4, Railway

Product shown: Centro, Triumph-LX, Eppa, Solution All-Fit, FlexCharge4, Railway, Birdi

Centro™

Centro
Privacy/Modesty screen

$380
MODEL # CENTRO-22- _ _ _

$410
MODEL # CENTRO-28- _ _ _

$440
MODEL # CENTRO-34- _ _ _

$535
MODEL # CENTRO-46- _ _ _

$575
MODEL # CENTRO-58- _ _ _

$715
MODEL # CENTRO-70- _ _ _

Reversible design for privacy or modesty
Universal mounting system allows brackets to be set for privacy or modesty applications

Eco-friendly
Centro screens are 100% recyclable and have been made from 60% post-consumer recycled plastic water bottles

Custom options are available
Contact our Customer Service Department for a customized Centro quote. Minimum quantity of four required. Additional costs and lead time may apply

Features
Available lengths: 22.0", 28.0", 34.0", 46.0", 58.0", and 70.0"
(Screens are actual size, sizes are designed to accommodate nominal worksurfaces.)

25.0" height

0.8" thickness

22.0", 28.0", 34.0" and 46.0" screens come with two worksurface mounting brackets, 58.0" and 70.0" come with three brackets

Lightweight screens

Sound level absorption up to .9 NRC rating

Mounting brackets designed to accommodate 0.5"–1.8" thick worksurfaces

Convenient tackable surface

22.0" and 28.0" lengths are recommended for side applications. Larger sizes are recommended for the back applications

VOC-Free

Warranty: 7 yr.

Available material colors

Charcoal -COL
48"/58" ships in 48 hrs.
22"/28"/34"/70" **LT**

Ash -ASH
48"/58" ships in 48 hrs.
22"/28"/34"/70" **LT**

Slate -SLT
All sizes **LT**

Sandstone -SND
All sizes **LT**

Pear Green -GRN
All sizes **LT**

Cobalt Blue -BLU
All sizes **LT**

Iced Grey -ICE
All sizes **LT**

Product shown: Birdi, FlexCharge9, Triumph-LX, Evolve2-MS

Birdi™

Birdi
Height adjustable perching stool

$401
MODEL # BIRDI- _ _ _

Seat design
Proprietary seat cushion design reduces pressure points and is more comfortable than other perching stools

Durability
Made with high resiliency foam making it more durable than others, which is ideal for use in high traffic areas

Features
Gas cylinder adjustment

Push button height adjustment

10.0" height adjustment range

12.5" base diameter

13.3" seat diameter

360° swivel

25.6 lbs. unit weight

275 lbs. user weight capacity

100% polyester fabric cushion

Self-balancing weighted base returns stool to upright position after use

Partial assembly required

Warranty: 3 yr. fabric; 5 yr. foam and cylinder; 15 yr. all other components

Available fabric finishes

- Black -BLK
- Snowy Gray -GRY
- Navy -NVY
- Taupe -TPE

Table base accessories

CPU cart

Mobile CPU cart

$153

MODEL # CPUCART-1-BLK

160 lbs. load capacity
Fits CPUs ranging from 3.8"–9.0" wide
CPU sits in adjustable tray
Four swivel caster wheels *(2 locking)*
Easy to assemble; no tools required to make adjustments
Warranty: 15 yr.

CPU01

Simple CPU holder

$171

MODEL # CPU01

125 lbs. load capacity
360° swivel
17.8" glide track
12.5" min. CPU depth
8.0" min. CPU width
24.0" min. CPU height
60.0" adjustable straps
Nylon security bands
Warranty: 15 yr.

CPU mini

Small profile CPU holder

$191

MODEL # CPUMINI

55 lbs. load capacity
360° swivel
13.4" ball bearing glide track
16.0"–22.0" adjustable height
Fits CPUs up to 20.0" in height
Warranty: 15 yr.

CPU05

Heavy duty CPU holder

$222

MODEL # CPU05

100 lbs. load capacity
360° swivel
17.8" glide track
2.5"–8.3" adjustable width
13.0"–21.0" adjustable height
Warranty: 15 yr.

Conceal

Cable management spine

$65

MODEL # CONCEAL-GRY
MODEL # CONCEAL-BLK
MODEL # CONCEAL-WHT

53.5" total height
23 links
Links are detachable
Weighted bottom
Attaches to bottom of worksurface
Warranty: 15 yr.

Trough

Cable management undermount tray

$28

MODEL # TROUGH-BLK

Mounts to most flat surfaces
18.0" troughs - set of two (2)
Mounts using heavy duty double sided tape or two screws provided
Warranty: 15 yr.

Utility cart

Rolling platform cart

$212

MODEL # ACPC-1-BLK

18.8" x 15.0" platform
150 lbs. load capacity
For printers, shredders, and other office machines
Includes non-slip pads
Swivel caster wheels *(2 locking)*
Warranty: 15 yr.

Pencil drawer

Sliding pencil drawer

$116

MODEL # ACPD01-BLK

Inside drawer dimensions:
20.5"w x 16.3"d x 2.0"h
Opening requirements:
23.0"w x 16.3"d x 2.0"h
Retracts on 16.0" ball bearing slides
Warranty: 1 yr.

Corner diagonal

For corners 17.0"–19.0" wide

$169

MODEL # ACCD90-17-BLK

$187

MODEL # ACCD90-21-BLK

Converts 90° corners to diagonal corners for additional work area.
Includes spacers and furniture protectors.
Accommodates surfaces up to 1.4" thick
Warranty: 15 yr.

Desk risers

Table base accessory

$75

MODEL # DESK1

Set of four stackable high-impact plastic risers
4.0"w x 4.0"d
Raises worksurface height in 1.0" increments
600 lbs. load capacity
(distributed weight)
Stackable to a maximum of three risers per leg
Warranty: 15 yr.

Footrest

Adjustable foot support

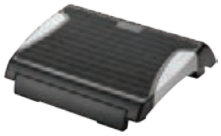

$128

MODEL # FR301-BLK

Ideal for users who cannot rest their feet comfortably on the floor
15.8"w x 13.8"d x 2.8"h
Anti-slip rubber mat on top platform
6°/12°/16°/25° angle adjustments
Folds flat for easy height adjustment and storage
Warranty: 15 yr.

Casters

For height adjustable bases

Fits table base	Model #	List price	GSA
All-Flex 2-leg	CASTERKIT-FLEX2	$67	GSA
All-Flex 3-leg	CASTERKIT-FLEX3	$84	GSA
Espree	CASTERKIT-2ESP	$67	GSA
Weight Adjustable Espree	CASTERKIT-2ESP-WA	$67	GSA
Q Crank	CASTERKIT-QCRANK	$67	–
Triumph-LX/ Victory-LX 2-leg	CASTERKIT-LX-2LEG	$50	–
Victory-LX 3-leg	CASTERKIT-LX-3LEG-BLK	$98	–
	CASTERKIT-LX-3LEG-SLV	$98	–
	CASTERKIT-LX-3LEG-WHT	$98	–

Sets of caster wheels for table bases

Increases height by 2.0"

Locking casters for security

Victory-LX 3-leg kits include a third foot for caster installation

Warranty: 15 yr.

Desktop sit-to-stand workstations

Sit, stand, be well

Stay comfortably on the move with desks that quickly and easily adjust to the best height for you. Sit-to-stand workstations support monitors or laptop computers, and feature built-in keyboard platforms. Any fixed-height workstation can be easily retrofitted to offer adjustable height options, so you can keep your momentum and your mobility.

Product shown: S2S, Eppa, FlexCharge4

S2S

S2S - raised

S2S - lowered

S2S
Desktop sit-to-stand workstation

$680
MODEL # S2S-BLK

Vertical motion
Straight vertical travel increases stability of work gear and technology

Precision positioning
Moves all of the workstation essentials in one fluid motion, stopping at any point along the way

Weight adjustment
Weight adjustable counterbalance pneumatic lift capability; built-in tension adjustment makes even heavy loads easy to lift. Tension is pre-set to lift 22 lbs.

Features
Pneumatic height adjustment

Weight adjustable counterbalance pneumatic lift capability; built-in tension adjustment

Sits atop worksurface

16.0" height adjustment range

Precision positioning

35 lbs. platform weight capacity

35.5"w x 21.0"d top platform

26.8"w x 10.5"d keyboard platform

24.0" min. worksurface depth

49 lbs. unit weight

Cable management

Arrives fully assembled

Compatible with Eppa™, Edge® and Evolve single and dual monitor arms
Monitor arms sold separately

Warranty: 5 yr.

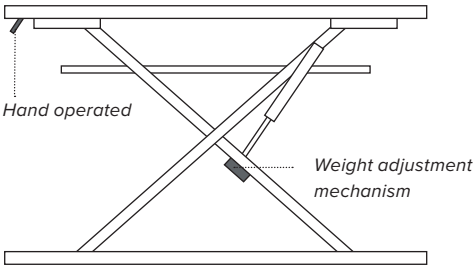

Rear view

Climb

Climb - raised

Climb - lowered

Climb

Single monitor arm desktop
sit-to-stand workstation

$828

MODEL # CLIMB1-SLV

Flexible positioning
Utilize your complete worksurface area by rotating the workstation side-to-side with the articulating arm. Monitor can be rotated for view in landscape or portrait orientation

Palm rest
Includes palm rest, adaptable for left or right-handed users on the keyboard platform

Rotation
The Climb platform is able to rotate 360° for added flexibility.

Features
Pneumatic height adjustment

Clamp mount to worksurface
6.0" clearance needed underneath worksurface

17.2" column height adjustment range

Precision positioning

25 lbs. platform weight capacity

27.0"w x 10.4"d top platform

26.5"w x 10.5"d keyboard platform

30.0" max. worksurface depth

Cable management

Partial assembly required

Single monitor arm integration
- 11.3" monitor mount height range
- 13.8" motion arm height range
- 20 lbs. max. monitor weight

Warranty: 3 yr.

Grommet mount
Grommet mount for Climb / Climb2

$38

MODEL # CLIMB-GM

Climb2

Climb2 - raised

Climb2 - lowered

Climb2

Dual monitor arm desktop
sit-to-stand workstation

$989

MODEL # CLIMB2-SLV

Flexible positioning
Utilize your complete worksurface area by rotating the workstation side-to-side with the articulating arm. Monitor can be rotated for view in landscape or portrait orientation

Palm rest
Includes palm rest, adaptable for left or right-handed users on the keyboard platform

Rotation
The Climb platform is able to rotate 360° for added flexibility.

Features

Pneumatic height adjustment

Clamp mount to worksurface
6.0" clearance needed underneath worksurface

17.2" column height adjustment range

Precision positioning

21 lbs. platform weight capacity

27.0"w x 10.4"d top platform

26.5"w x 10.5"d keyboard platform

30.0" max. worksurface depth

Cable management

Partial assembly required

Dual monitor arm integration
- 11.3" monitor mount height range
- 13.8" motion arm height range
- 20 lbs. max. monitor weight per monitor
- 21.8" max. monitor width

Bezel measured left to right,
Max width is contingent on weight capacity

Warranty: 3 yr.

Grommet mount
Grommet mount for Climb / Climb2

$38

MODEL # CLIMB-GM

Desktop sit-to-stand workstations

S2S

Desktop sit-to-stand workstation

$680

Climb

Single monitor arm desktop sit-to-stand workstation

$828

Climb2

Dual monitor arm desktop sit-to-stand workstation

$989

MODEL # S2S-BLK	MODEL # CLIMB1-SLV	MODEL # CLIMB2-SLV
Black -BLK	Silver -SLV	Silver -SLV
Pneumatic height adjustment	Pneumatic height adjustment	Pneumatic height adjustment
Weight adjustable counterbalance pneumatic lift capability; built-in tension adjustment	–	–
Sits atop worksurface	Clamp mount to worksurface; Grommet mount sold separately - MODEL # CLIMB-GM **$37**	Clamp mount to worksurface Grommet mount sold separately - MODEL # CLIMB-GM **$37**
16.0" height adjustment range	17.2" column height adjustment range	17.2" column height adjustment range
Precision positioning	Precision positioning	Precision positioning
35 lbs. platform weight capacity	25 lbs. platform weight capacity	21 lbs. platform weight capacity
35.5"w x 21"d top platform	27.0"w x 10.4"d top platform	35.5"w x 21.0"d top platform
26.8"w x 10.5"d keyboard platform:	26.5"w x 10.5"d keyboard platform	27.0"w x 10.4"d top platform
24.0" min. worksurface depth	24.0" min. worksurface depth	30.0" max. worksurface depth
49 lbs. unit weight	–	–
Arrives fully assembled	Partial assembly required	Partial assembly required
Compatible with Eppa™, Edge® and Evolve single and dual monitor arms *Monitor arms sold separately*	Single monitor arm integration 11.3" monitor mount height range 13.8" motion arm height range 20 lbs. max. monitor weight	Dual monitor arm integration 11.3" monitor mount height range 13.8" motion arm height range 20 lbs. max. monitor weight per monitor 21.8" max. monitor width *Bezel measured left to right,* *Max width is contingent on weight capacity*
Warranty: 5 yr.	Warranty: 3 yr.	Warranty: 5 yr.
GSA	GSA	GSA

Visit our website for additional specs, dimensional drawings, alternative images and more resources for all of ESI's products.

Power solutions

Plug in to power up

Position the power where you need it. Worksurfaces get a charge with the FlexCharge series, while workstations can be wired with the Railway series. Flexible mounting options make these adaptable for any workspace including individual workstations, conference rooms, collaborative spaces, and benching environments.

Product shown: (Top) Triumph-LX, Eppa2, Pixie LEDX, Solution 1CC, CPU01, Railway, FlexCharge4, Centro; (Bottom left) FlexCharge9; (Bottom right) FlexCharge4, Conceal

Railway™

Railway
Power and data solution

Open office solution
Optimizes open space with data and power rails with single and double sided options in four available widths

Visually clean
Keeps all of the electrical and data wiring hidden inside the rail's simple design

Post feet
All posts come standard with a T-foot which is ideal for use in open floor plan. Alternatively, the the L-foot is available to accommodate applications against a wall or partition

Features

(4) Four available widths: 36.0" 48.0" 60.0" and 72.0"

18.0"h post

4.0"w x 12.0"d T foot - *standard*
4.0"w x 8.0"d L foot - *optional*

Double and single side systems

Cable/data channel

Up to 13 double runs or 26 single runs can be connected to each other

Up to 8 outlets per rail and inputs for data

Flexible power feeds with 3.5" of extension through flexible metal conduit

UL listed

20 amps

(4) Four circuits with 4-line conductors, 2 neutrals and 2 grounds

Fourth circuit is isolated and dedicated

Optional electric compliance available for municipal standards such as NY Box, California Title 24, and Chicago

Please reference the Railway Spec Guide for more details

Warranty: 15 yr. *(structural)* / 7 yr. *(electrical)*

Available finishes

Silver -SLV
48.0"/60.0" ships in 48 hrs.
36.0"/72.0" **LT**

Black -BLK **LT**

White -WHT **LT**

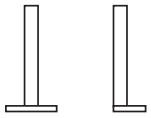

T-foot *L-Foot*

profile view

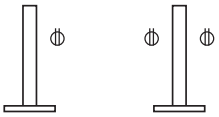

Single run *Double run*

side view

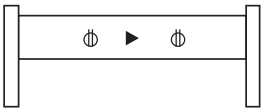

Electrical outlet(s) ▶ *Data/Telephone outlet(s)*

Linear pre-configuration

plan view

Single run

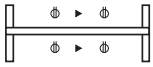

Double run

Expansion pre-configuration

Please specify either a 90° or 180° post

plan view

Single run

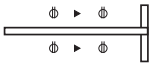

Double run

90° pre-configuration

plan view

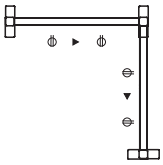

Single run

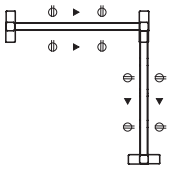

Double run

Bullpen pre-configuration

plan view

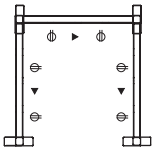

Single run

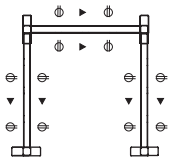

Double run

3-way pre-configuration

plan view

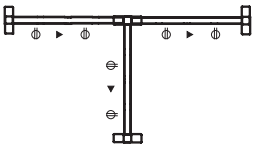

Single run

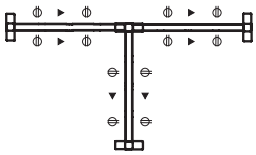

Double run

4-way pre-configuration

plan view

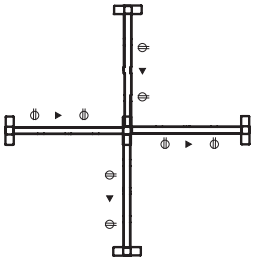

Single run

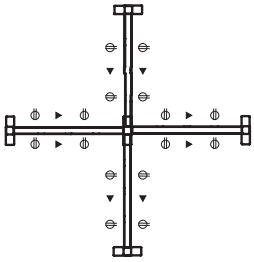

Double run

Custom configurations

Please refer to our Railway Spec Guide or contact our Customer Service Department for additional details on customizing additional configurations

Railway™

Linear configurations

Electrical outlet(s) ▶ *Data/Telephone outlet(s)*

2-pack

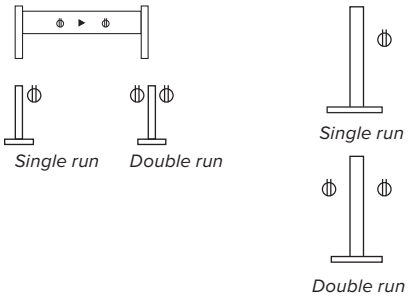

Single run

Rail model	List price
RAIL-KIT36-2PK-SNGL-_ _ _	$1,445
RAIL-KIT48-2PK-SNGL-_ _ _	$1,482
RAIL-KIT60-2PK-SNGL-_ _ _	$1,545
RAIL-KIT72-2PK-SNGL-_ _ _	$1,612

Double run

Rail model	List price
RAIL-KIT36-2PK-DBL-_ _ _	$1,483
RAIL-KIT48-2PK-DBL-_ _ _	$1,520
RAIL-KIT60-2PK-DBL-_ _ _	$1,583
RAIL-KIT72-2PK-DBL-_ _ _	$1,650

Rail kits include: rails, post kits, jumpers, and basefeed. Refer to Railway Spec guide for quanitities.

4-pack

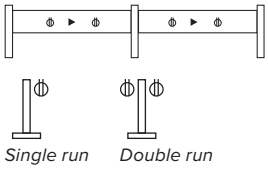

Single run

Rail model	List price
RAIL-KIT36-4PK-SNGL-_ _ _	$2,595
RAIL-KIT48-4PK-SNGL-_ _ _	$2,669
RAIL-KIT60-4PK-SNGL-_ _ _	$2,795
RAIL-KIT72-4PK-SNGL-_ _ _	$2,929

Double run

Rail model	List price
RAIL-KIT36-4PK-DBL-_ _ _	$2,671
RAIL-KIT48-4PK-DBL-_ _ _	$2,745
RAIL-KIT60-4PK-DBL-_ _ _	$2,871
RAIL-KIT72-4PK-DBL-_ _ _	$3,005

Rail kits include: rails, post kits, jumpers, and basefeed. Refer to Railway Spec guide for quanitities.

6-pack

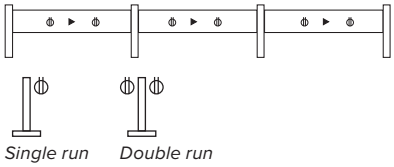

Single run

Rail model	List price
RAIL-KIT36-6PK-SNGL-_ _ _	$3,745
RAIL-KIT48-6PK-SNGL-_ _ _	$3,856
RAIL-KIT60-6PK-SNGL-_ _ _	$4,045
RAIL-KIT72-6PK-SNGL-_ _ _	$4,246

Double run

Rail model	List price
RAIL-KIT36-6PK-DBL-_ _ _	$3,859
RAIL-KIT48-6PK-DBL-_ _ _	$3,970
RAIL-KIT60-6PK-DBL-_ _ _	$4,159
RAIL-KIT72-6PK-DBL-_ _ _	$4,360

Rail kits include: rails, post kits, jumpers, and basefeed. Refer to Railway Spec guide for quanitities.

8-pack

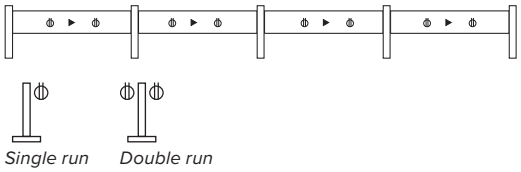

Single run

Rail model	List price
RAIL-KIT36-8PK-SNGL-_ _ _	$4,895
RAIL-KIT48-8PK-SNGL-_ _ _	$5,043
RAIL-KIT60-8PK-SNGL-_ _ _	$5,295
RAIL-KIT72-8PK-SNGL-_ _ _	$5,563

Double run

Rail model	List price
RAIL-KIT36-8PK-DBL-_ _ _	$5,047
RAIL-KIT48-8PK-DBL-_ _ _	$5,195
RAIL-KIT60-8PK-DBL-_ _ _	$5,447
RAIL-KIT72-8PK-DBL-_ _ _	$5,715

Rail kits include: rails, post kits, jumpers, and basefeed. Refer to Railway Spec guide for quanitities.

Additional configurations

Please refer to our Railway Spec Guide or contact our Customer Service Department for pricing and details on other pre-configurations or customized configurations

Linear configurations

Drawings are not to scale

Electrical outlet(s) ▶ *Data/Telephone outlet(s)*

2-pack

profile view

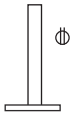

Single run

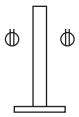

Double run

side view

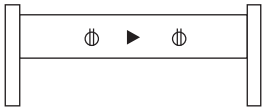

plan view

Single run

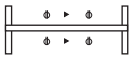

Double run

4-pack

profile view

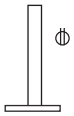

Single run

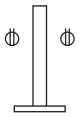

Double run

side view

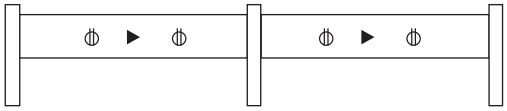

plan view

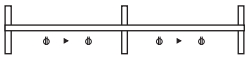

Single run

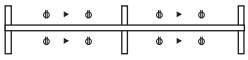

Double run

6-pack

profile view

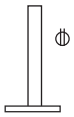

Single run

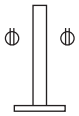

Double run

side view

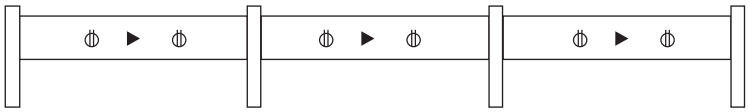

plan view

Single run

Double run

8-pack

profile view

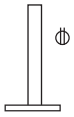

Single run

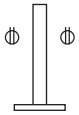

Double run

side view

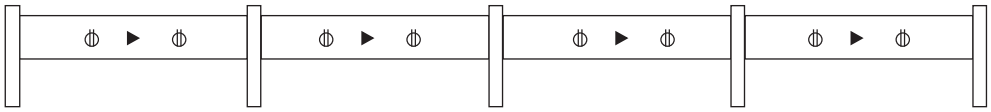

plan view

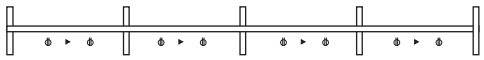

Single run

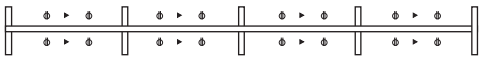

Double run

Additional configurations

Please refer to our Railway Spec Guide or contact our Customer Service Department for drawings and details on other pre-configurations

FlexCharge4™

FlexCharge4
Personal desktop power

$209
MODEL # FCH4-DSK-_ _ _

Quick reach
Puts power within reach for any individual desk or benching environment

Charging
Includes quick-charge USB ports for powering up phones, tablets or other devices

Features
(2) Two AC outlets: 15A, 125V, 60Hz

(2) Two quick-charge USB outlets: 3.1A, 5V

Can be mounted in a 2.0" grommet or with included clamp (to the top or underside of worksurface)

Meets spill-protection criteria

UL and cUL listed

8.0' power cord

Built-in surge protection with indicator light

Warranty: 1 yr.

Available finishes

White -WHT

Black -BLK

FlexCharge9™

FlexCharge9
Tabletop power pod

$262
MODEL # FCH9-POD-_ _ _

Quick reach
Puts power within reach for any collaborative area or conference room

Charging
Ideal for multiple users to charge up to nine devices at once with quick-charge USB ports and AC outlets

Features
(5) Five AC outlets: 15A, 125V, 60Hz

(4) Four quick-charge USB outlets: 3.1A, 5V

Ideal for worksurfaces in collaborative spaces and conference rooms

Meets spill-protection criteria

UL and cUL listed

8.0' power cord

Built-in surge protection with indicator light

Circuit reset button on the underside of device

Warranty: 1 yr.

GSA

Available finishes

White -WHT

Black -BLK

Pink -PNK
100% of profits for Pink FlexCharge9 and FlexCharge9 Ring benefit The Common Thread for the Cure

FlexCharge9 Ring
Interchangeable top ring with a simple snap on, snap off design

Available in pink

$19
MODEL # FCH9-RING-PNK

Keyboard solutions

Just your type

Increase your productivity with keyboard solutions. Each is easily modified to fit your preferences, and features built-in elements like tilt adjustment, palm rest, and glide track. From emails to spreadsheets, we'll make every keystroke comfortable.

Product shown: Solution 2, Victory-LX 3-leg

Product shown: Solution Ultra, All-Flex 3-leg, Evolve2-M, FlexCharge4, Conceal

Combo solutions

Solution Ultra

Keyboard combo solution

$466

MODEL # SOLUTION-ULTRA

Switch-n-click mousing
Adjust mousing area to be used in three positions: over the keyboard, next to the keyboard or in a mouse forward position

Lift-and-lock
Make quick and easy adjustments and set a comfortable tilt

Features

Recommended for radius corner worksurfaces

PL217 keyboard platform

18.8" keyboard platform with
9.3" switch-n-click mousing platform

AA360 articulating arm

Lift-and-lock adjustment

21.0" glide track

21.0" clearance required for full retraction

±15° tilt adjustment

7.0" adjustment range
2.5" height above track
4.5" height below track

360° glide track rotation

Positions flush with worksurface

Warranty: 15 yr. *(articulating arm/platform)*
2 yr. *(palm rest/mouse pads)*

Solution All-Fit

Keyboard combo solution

$435

MODEL # SOLUTIONALL-FIT

Save space
Keyboard platforms help maximize the amount of available space on a worksurface

Dual retraction
This innovative mechanism retracts at two points to achieve full clearance under worksurfaces as shallow as 13 inches

Features

Recommended for shallow worksurfaces, or benching applications

PL003-27N keyboard platform

27.0" keyboard platform with notch

AA100-PTLO articulating arm

Lift-and-lock adjustment

13.0" glide track

13.0" clearance required for full retraction

+22.6°/-12.4° tilt adjustment

6.0" height adjustment range
2.4" height above track
3.6" height below track

360° glide track rotation

Positions flush with worksurface

Warranty: 15 yr. *(articulating arm/platform)*
2 yr. *(palm rest/mouse pads)*

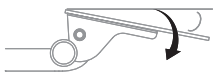

Positive tilt

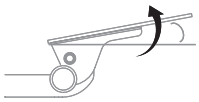

Negative tilt

Combo solutions

Solution 1
Solution 1CC

Keyboard platform combo

$319

Solution 2
Solution 2CC

Keyboard platform combo

$412

Solution 3

Keyboard platform combo

$460

MODEL # SOLUTION1 MODEL # SOLUTION1CC	MODEL # SOLUTION2 MODEL # SOLUTION2CC	MODEL # SOLUTION3
Recommended for straight edge worksurfaces (Solution 1) or diagonal corner worksurfaces (Solution 1CC)	Recommended for straight edge worksurfaces (Solution 2) or diagonal corner worksurfaces (Solution 2CC)	Recommended for radius corner worksurfaces
PL003-25 or PL003CC-25 keyboard platform(s)	PL003-25 or PL003CC-25 keyboard platform(s)	PL215 keyboard platform
25.0" keyboard platform, rectangle or cut corner	25.0" keyboard platform, rectangle or cut corner	18.8" keyboard platform with swivel mouse-below platform
AA260 articulating arm	AA360 articulating arm	AA360 articulating arm
Spring assisted adjustment	Lift-and-lock adjustment	Lift-and-lock adjustment
17.0" glide track	21.0" glide track	21.0" glide track
–	21.0" clearance required for full retraction	21.0" clearance required for full retraction
±15° tilt adjustment	±15° tilt adjustment	±15° tilt adjustment
6.3" adjustment range 1.3" height above track 5.0" height below track	7.0" adjustment range 2.5" height above track 4.5" height below track	7.0" adjustment range 2.5" height above track 4.5" height below track
360° glide track rotation	360° glide track rotation	360° glide track rotation
Positions flush with worksurface	Positions flush with worksurface	Positions flush with worksurface
Available in R-Series* *(cut corner only)*	Available in R-Series* *(cut corner only)*	–
Warranty: 15 yr. *(articulating arm/platform)* 2 yr. *(palm rest/mouse pads)*	Warranty: 15 yr. *(articulating arm/platform)* 2 yr. *(palm rest/mouse pads)*	Warranty: 15 yr. *(articulating arm/platform)* 2 yr. *(palm rest/mouse pads)*
GSA	GSA	GSA

*R-Series platforms are composed of 100% post-consumer materials, making them completely recyclable. They are free of formaldehydes and carcinogens and emit no VOC's (Volatile Organic Compounds).

Visit our website for additional specs, dimensional drawings, alternative images and more resources for all of ESI's products.

Solution Ultra

Keyboard platform combo

$466

Solution 4

Keyboard platform combo

$511

Solution 6
Solution 6CC

Keyboard platform combo

$436

MODEL # SOLUTIONULTRA	MODEL # SOLUTION4	MODEL # SOLUTION6 MODEL # SOLUTION6CC
Recommended for radius corner worksurfaces	Recommended for straight edge worksurfaces or diagonal corner worksurfaces	Recommended for straight edge worksurfaces (Solution 6) or diagonal corner worksurfaces (Solution 6CC)
PL217 keyboard platform	PLMAC keyboard platform	PL003-27 or PL003CC-27 keyboard platform(s)
18.8" keyboard platform with 9.3" switch-n-click mousing platform	26.5" platform reversible at installation	27.0" keyboard platform, rectangle or cut corner
AA360 articulating arm	AA370 articulating arm	AA750DAT articulating arm
Lift-and-lock adjustment	Lift-and-lock adjustment	Lift-and-lock and dial-a-tilt adjustment
21.0" glide track	24.8" glide track	21.8" glide track
21.0" clearance required for full retraction	25.0" clearance required for full retraction	22.0" clearance required for full retraction
±15° tilt adjustment	±15° tilt adjustment	+10°/-15° tilt adjustment
7.0" adjustment range 2.5" height above track 4.5" height below track	16.0" adjustment range 8.0" height above track 8.0" height below track	7.2" adjustment range 2.3" height above track 4.9" height below track
360° glide track rotation	360° glide track rotation	360° glide track rotation
Positions flush with worksurface	Positions flush with worksurface	Positions flush with worksurface
–	–	–
Warranty: 15 yr. *(articulating arm/platform)* 2 yr. *(palm rest/mouse pads)*	Warranty: 15 yr. *(articulating arm/platform)* 2 yr. *(palm rest/mouse pads)*	Warranty: 15 yr. *(articulating arm/platform)* 2 yr. *(palm rest/mouse pads)*
GSA	GSA	GSA

Combo solutions

Solution 7

Keyboard platform combo

$482

Solution All-Fit

Keyboard platform combo

$435

Solution 90

Keyboard platform combo

$599

MODEL # SOLUTION7	MODEL # SOLUTIONALL-FIT	MODEL # SOLUTION90
Recommended for radius corner worksurfaces	Recommended for straight edge worksurfaces or shallow worksurfaces	Recommended for 90° corner worksurfaces only
PL217 keyboard platform	PL003-27N keyboard platform	PL003CC-25 keyboard platform
18.8" keyboard platform with 9.3" switch-n-click mousing platform	27.0" keyboard platform with notch	25.0" cut corner keyboard platform
AA750DAT articulating arm	AA100-PTLO articulating arm	AA355DS articulating arm
Lift-and-lock and dial-a-tilt adjustment	Lift-and-lock adjustment	Lift-and-lock with dual swivel adjustment
21.8" glide track	13.0" glide track	21.8" glide track
22.0" clearance required for full retraction	13.0" clearance required for full retraction	22.0" clearance required for full retraction
+10°/-15° tilt adjustment	+22.6°/-12.4° tilt adjustment	+10°/-15° tilt adjustment
7.2" adjustment range 2.3" height above track 4.9" height below track	6.0" adjustment range 2.4" height above track 3.6" height below track	9.3" adjustment range 3.4" height above track 5.9" height below track
360° glide track rotation	360° glide track rotation	360° glide track rotation
Positions flush with worksurface	Positions flush with worksurface	Positions flush with worksurface
–	–	Available in R-Series*
Warranty: 15 yr. *(articulating arm/platform)* 2 yr. *(palm rest/mouse pads)*	Warranty: 15 yr. *(articulating arm/platform)* 2 yr. *(palm rest/mouse pads)*	Warranty: 15 yr. *(articulating arm/platform)* 2 yr. *(palm rest/mouse pads)*
GSA	GSA	GSA

*R-Series platforms are composed of 100% post-consumer materials, making them completely recyclable. They are free of formaldehydes and carcinogens and emit no VOC's (Volatile Organic Compounds).

Visit our website for additional specs, dimensional drawings, alternative images and more resources for all of ESI's products.

Keyboard platforms

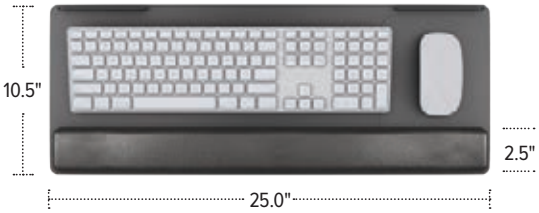

PL003
Rectangle platform

$125
MODEL # PL003-19
19" wide

$153
MODEL # PL003-25
25" wide (shown)

$162
MODEL # PL003-27
27" wide

Features
For use with straight edge worksurfaces

Accommodates left or right-handed users

Warranty: 15 yr. *(platform)*
2 yr. *(palm rest/mouse pads)*

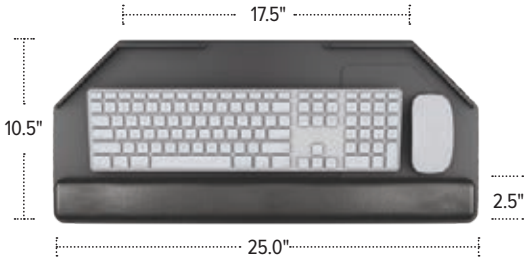

PL003CC
Cut corner platform

$153
MODEL # PL003CC-25
25" wide (shown)

$178
MODEL # PL003CCR-25
*25" wide R-Series**

$162
MODEL # PL003CC-27
27" wide

$204
MODEL # PL003CCR-27
*27" wide R-Series**

Features
For use with diagonal corner worksurfaces

Accommodates left or right-handed users

Warranty: 15 yr. *(platform)*
2 yr. *(palm rest/mouse pads)*

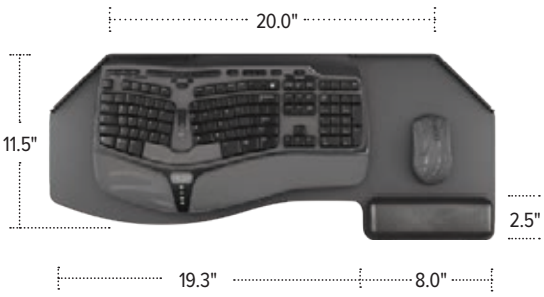

PL005CC
Natural cut corner platform

$138
MODEL # PL005CC

Features
Designed for use with natural style keyboards

Warranty: 15 yr. *(platform)*
2 yr. *(palm rest/mouse pads)*

*R-Series platforms are composed of 100% post-consumer materials, making them completely recyclable. They are free of formaldehydes and carcinogens and emit no VOC's (Volatile Organic Compounds).

Keyboard platforms

PL006
Radius platform

$162

MODEL # PL006-27

Features

Designed for 42.0" and larger radius corner worksurfaces

Accommodates left or right-handed users

Warranty: 15 yr. *(platform)*
2 yr. *(palm rest/mouse pads)*

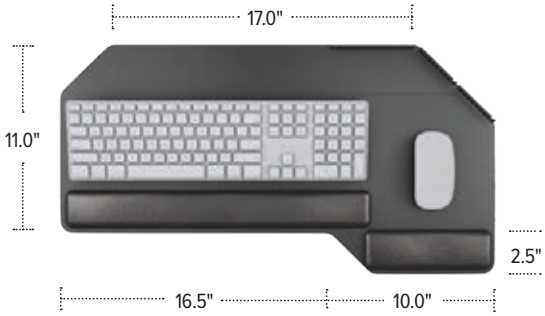

PLMAC
Cut corner platform

$166

MODEL # PLMAC

Features

Designed for straight edge and 21.0" or larger diagonal corner worksurfaces

Accommodates left or right-handed users

Palm rest for both keying and mousing

Warranty: 15 yr. *(platform)*
2 yr. *(palm rest/mouse pads)*

PL215
Swivel mouse-below platform

$203

MODEL # PL215

Features

Offers a universal fit on virtually any worksurface shape

Accommodates left or right-handed users

Palm rest for both keying and mousing

18.8" platform with a swivel-below mousing platform

Warranty: 15 yr. *(platform)*
2 yr. *(palm rest/mouse pads)*

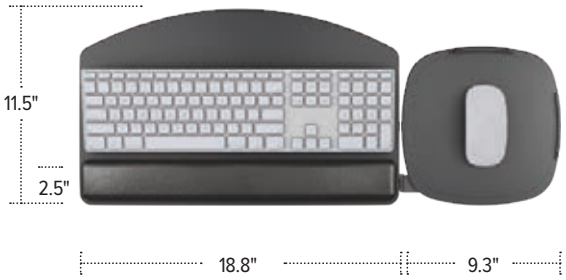

PL217

Switch-n-click platform

$208

MODEL # PL217 *(SHOWN)*

$196

MODEL # PL217NAT

Features

Reversible design; mouse platform mounts on left or right side - no tools required

Independent tilt and swivel mousing platform

Can be used as a mouse in line, mouse over, or mouse forward

Warranty: 15 yr. *(platform)*
2 yr. *(palm rest/mouse pads)*

PL200

Slide-out mouse platform

$240

MODEL # PL200

Features

Left to right slide-out mouse tray

18.8" width while in closed position

27.8" width while in open position

Accommodates left or right-handed users

Warranty: 15 yr. *(platform)*
2 yr. *(palm rest/mouse pads)*

AA903

Keyboard drawer slide platform

$185

MODEL # AA903
Not compatible with articulating arms

Features

25.0" width accommodates both keyboard and mouse

Retractable on 15.0" ball bearing slides

Warranty: 15 yr. *(platform)*
2 yr. *(palm rest/mouse pads)*

Articulating arms

AA260

Articulating arm

$165

AA330

Articulating arm

$258

AA360

Articulating arm

$258

MODEL # AA260	MODEL # AA330	MODEL # AA360
Spring assisted adjustment	Lift-and-lock adjustment	Lift-and-lock adjustment
17.0" glide track	17.8" glide track	21.0" glide track
No minimum clearance required for full retraction	No minimum clearance required for full retraction	21.0" minimum clearance required for full retraction
±15° tilt adjustment	±15° tilt adjustment	±15° tilt adjustment
6.3" adjustment range 1.3" height above track 5.0" height below track	7.0" adjustment range 2.5" height above track 4.5" height below track	7.0" adjustment range 2.5" height above track 4.5" height below track
360° glide track rotation	360° glide track rotation	360° glide track rotation
Positions flush with worksurface	Positions flush with worksurface	Positions flush with worksurface
Recommended for any platform	Recommended for any platform	Recommended for any platform
Warranty: 15 yr.	Warranty: 15 yr.	Warranty: 15 yr.
GSA	GSA	GSA

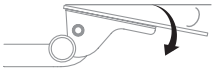

Positive tilt

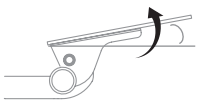

Negative tilt

Visit our website for additional specs, dimensional drawings, alternative images and more resources for all of ESI's products.

AA100-PTLO

Articulating arm

$273

AA750DAT

Articulating arm

$274

AA370

Articulating arm with extended reach

$345

MODEL # AA100-PTLO	MODEL # AA750DAT	MODEL # AA370
Lift-and-lock adjustment	Lift-and-lock and dial-a-tilt adjustment	Lift-and-lock adjustment
13.0" glide track	21.8" glide track	24.8" glide track
13.0" minimum clearance required for full retraction	22.0" minimum clearance required for full retraction	25.0" minimum clearance required for full retraction
+22.6°/-12.4° tilt adjustment	+10°/-15° tilt adjustment	±15° tilt adjustment
6.0" adjustment range 2.4" height above track 3.6" height below track	7.1" adjustment range 2.2" height above track 4.9" height below track	16.0" adjustment range 8.0" height above track 8.0" height below track
360° glide track rotation	360° glide track rotation	360° glide track rotation
Positions flush with worksurface	Positions flush with worksurface	Positions flush with worksurface
Recommended for PL003-27N notched platform	Recommended for any platform	Recommended for any platform
Warranty: 15 yr.	Warranty: 15 yr.	Warranty: 15 yr.
GSA	GSA	GSA

Articulating arms

AA780DAT

Articulating arm

$406

AA355DS

Articulating arm

$445

MODEL # AA780DAT	MODEL # AA355DS
Lift-and-lock and dial-a-tilt adjustment	Lift-and-lock adjustment
21.8" glide track	21.8" glide track
22.0" minimum clearance required for full retraction	22.0" minimum clearance required for full retraction
+10°/-15° tilt adjustment	+10°/-15° tilt adjustment
12.9" adjustment range 8.2" height above track 4.7" height below track	9.3" adjustment range 3.4" height above track 5.9" height below track
360° glide track rotation	360° glide track rotation
Positions flush with worksurface	–
Recommended for any platform	Recommended for cut corner platforms
Warranty: 15 yr.	Warranty: 15 yr.
GSA	GSA

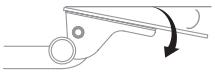

Positive tilt

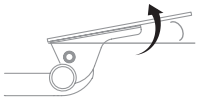

Negative tilt

Visit our website for additional specs, dimensional drawings, alternative images and more resources for all of ESI's products.

Keyboard accessories

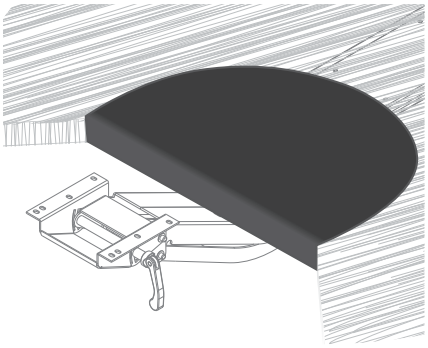

Corner diagonal

$169

MODEL # ACCD90-17-BLK

For use on corners less than 17.0" wide

$187

MODEL # ACCD90-21-BLK

For use on corners less than 21.0" wide

Features

Converts 90° corners to diagonal corners for additional work area and moves the user closer to the worksurface

Includes spacers and furniture protectors

Accommodates surfaces up to 1.4" thick

Warranty: 15 yr.

Spacer kit

$67

MODEL # SPACERKIT-KBD-BLK

Features

Ideal for height adjustable tables and benching systems, the kit creates a flat mounting surface for keyboard arms and glide tracks where cross channels typically prevent installations

Attaches between underside of worksurface and a keyboard arm or glide track

Includes mounts for benching systems and height adjustable tables

Powder coated steel construction

(2) Two sets of spacers included to accommodate needed spacing between 1.0"–2.2"

Includes installation hardware

Warranty: 15 yr.

Lighting

Another bright idea

Shine your light exactly where you want it with desktop task lighting and under cabinet lighting. Lights feature dimming options, occupancy sensors, and other energy and convenience features. Plus, workspace lighting provides flexible tilt and rotation so you can brighten your workspace and bring on the workday.

Product shown: Lustre, FlexCharge4, Edge2-MS

Pixie series

Pixie-LED

Small profile task light

$173

MODEL # PIXIE-LED-_ _ _

Available finishes

Silver -SLV

Pink -PNK
100% of profits for Pink FlexCharge9 and FlexCharge9 Ring benefit The Common Thread for the Cure

Features

LED

3000 K color temperature

250 lumens

80 CRI

3 watts

50,000 hrs. lamp life

7.0' power cord

Power source is UL listed

11.8" reach

Warranty: 15 yr. *(structural)*
1 yr. *(LED transformer)*

Pixie-LEDX

Small profile task light with USB charging port

$216

MODEL # PIXIE-LEDX-SLV

Available finishes

Silver -SLV

Features

LED

3000 K color temperature

290 lumens

80 CRI

3 watts

50,000 hrs. lamp life

11.8" reach

8 hr. auto shut-off

Built-in dimmer

7.0' power cord

Power source is UL listed

USB charging port

Warranty: 15 yr. *(structural)*
1 yr. *(LED transformer)*

Vivid series

Vivid-X

Single arm LED task light

$388

MODEL # VIVID-X-SLV

Available finishes

Silver -SLV

Features

LED

4100 K color temperature

356 lumens

85 CRI

6 watts

50,000 hrs. lamp life

8 hr. auto shut-off

Built-in dimmer

6.0' power cord

Power source is UL listed

21.0" reach

Warranty: 15 yr. *(structural)*
1 yr. *(LED transformer)*

Vivid-LEX

Two arm LED task light

$404

MODEL # VIVID-LEX-SLV

Available finishes

Silver -SLV

Features

LED

4100 K color temperature

356 lumens

85 CRI

6 watts

50,000 hrs. lamp life

8 hr. auto shut-off

Built-in dimmer

6.0' power cord

Power source is UL listed

36.0" reach

Warranty: 15 yr. *(structural)*
1 yr. *(LED transformer)*

Lustre

Lustre

Telescoping LED task light

$597

MODEL # LUSTRE-_ _ _

Available finishes

- Silver -SLV
- White -WHT

Features

LED

3500 K color temperature

350 lumens

83 CRI

6 watts

50,000 hrs. lamp life

Occupancy sensor

Built-in dimmer

12.0' power cord

Power source is UL listed

USB charging port

Telescoping reach

Warranty: 15 yr. *(structural)*
1 yr. *(LED transformer)*

Task lighting

Pixie-LED

Small profile task light

$173

Pixie-LEDX

Small profile task light with USB charging port

$216

Vivid-X

Single arm LED task light

$388

MODEL # PIXIE-LED-_ _ _	MODEL # PIXIE-LEDX-SLV	MODEL # VIVID-X-SLV
Silver -SLV	Silver -SLV	Silver -SLV
Pink -PNK		
LED	LED	LED
3000 K color temperature	3000 K color temperature	4100 K color temperature
250 lumens	290 lumens	520 lumens
80 CRI	80 CRI	85 CRI
3 watts	3 watts	6 watts
50,000 hrs. lamp life	50,000 hrs. lamp life	50,000 hrs. lamp life
–	–	–
–	8 hr. auto shut-off	8 hr. auto shut-off
–	Built-in dimmer	Built-in dimmer
7.0' power cord	7.0' power cord	6.0' power cord
Power source is UL listed	Power source is UL listed	Power source is UL listed
–	USB charging port	–
11.8" reach	11.8" reach	21.0" reach
Warranty: 15 yr. *(structural)* / 1 yr. *(LED transformer)*	Warranty: 15 yr. *(structural)* / 1 yr. *(LED transformer)*	Warranty: 15 yr. *(structural)* / 1 yr. *(LED transformer)*
–	–	–

Visit our website for additional specs, dimensional drawings, alternative images and more resources for all of ESI's products.

Vivid-LEX

Two arm LED task light

$404

MODEL # VIVID-LEX-SLV

Silver -SLV

Lustre

Telescoping LED task light with USB charging port

$597

MODEL # LUSTRE-_ _ _

Silver -SLV

White -WHT

LED	LED
4100 K color temperature	3500 K color temperature
520 lumens	350 lumens
85 CRI	83 CRI
6 watts	6 watts
50,000 hrs. lamp life	50,000 hrs. lamp life
–	Occupancy sensor
8 hr. auto shut-off	–
Built-in dimmer	Built-in dimmer
6.0' power cord	12.0' power cord
Power source is UL listed	Power source is UL listed
–	USB charging port
36.0" reach	Telescoping reach
Warranty: 15 yr. *(structural)* / 1 yr. *(LED transformer)*	Warranty: 15 yr. *(structural)* / 1 yr. *(LED transformer)*
–	GSA

Product shown: G2

Fluorescent series

Fluorescent - 24"
Under cabinet lighting track

$201
MODEL # UCL24MAG-BLK

Features
21.7"w x 6.4"d x 1.5"h unit size

260 lumens

13 watts

3500 K color temperature

9.0' power cord

Power source is UL listed

Integrated magnet mounting system, spring bars and wood screws

Warranty: 15 yr. *(structural)* / 1 yr. *(fluorescent ballast)*

Fluorescent - 48"
Under cabinet lighting track

$244
MODEL # UCL48MAG-BLK

Features
35.0"w x 6.4"d x 1.5"h unit size

759 lumens

39 watts

3500 K color temperature

9.0' power cord

Power source is UL listed

Integrated magnet mounting system, spring bars and wood screws

Warranty: 15 yr. *(structural)* / 1 yr. *(fluorescent ballast)*

Lucera series

Lucera - 24"
Under cabinet LED lighting track

$320
MODEL # LUCERA-24-SLV

$642
MODEL # LUCERA-24X2-SLV
Set of 2
Includes (1) 24.0" jumper cord

$962
MODEL # LUCERA-24X3-SLV
Set of 3
Includes (2) 24.0" jumper cords

$1,383
MODEL # LUCERA-24X4-SLV
Set of 4
Includes (3) 24.0" jumper cords

Features
20.1"w x 0.8"d x 0.5"h unit size

250 lumens

6 watts

3500 K color temperature

85 CRI

50,000 hrs. lamp life

Occupancy sensor sold separately

Continuous dimmer

9.0' power cord

Power source is UL listed

Combination wood and magnet mounting hardware

Warranty: 15 yr. *(structural)* / 1 yr. *(LED transformer)*

Lucera - 36"
Under cabinet LED lighting track

$440
MODEL # LUCERA-36-SLV

$883
MODEL # LUCERA-36X2-SLV
Set of 2
Includes (1) 24.0" jumper cord

$1,321
MODEL # LUCERA-36X3-SLV
Set of 3
Includes (2) 24.0" jumper cords

$1,860
MODEL # LUCERA-36X4-SLV
Set of 4
Includes (3) 24.0" jumper cords

Features
31.7"w x 0.8"d x 0.5"h unit size

420 lumens

10 watts

3500 K color temperature

85 CRI

50,000 hrs. lamp life

Occupancy sensor sold separately

Continuous dimmer

9.0' power cord

Power source is UL listed

Combination wood and magnet mounting hardware

Warranty: 15 yr. *(structural)* / 1 yr. *(LED transformer)*

Occupancy sensor
One occupancy sensor controls every daisy chained Lucera light, shutting-off all connected lights simultaneously. When motion is detected, lights resume the last brightness setting

$131
MODEL # LUCERA-OS

G2 series

G2 - 24"
Under cabinet LED lighting track

$451
MODEL # LEDG2-24-SLV

$897
MODEL # LEDG2-24X2-SLV
Set of 2
Includes (1) 24.0" jumper cord

$1,400
MODEL # LEDG2-24X3-SLV
Set of 3
Includes (2) 24.0" jumper cords

$1,758
MODEL # LEDG2-24X4-SLV
Set of 4
Includes (3) 24.0" jumper cords

Features
20.0"w x 1.0"d x 1.2"h unit size

430 lumens *(with diffuser)*
550 lumens *(without diffuser)*

8.5 watts

3500 K color temperature

85 CRI

50,000 hrs. lamp life

Occupancy sensor sold separately

Continuous dimmer

9.0' power cord

Power source is UL listed

360° rotation

Optical diffuser

Combination wood and magnet mounting hardware

Warranty: 15 yr. *(structural)* /
1 yr. *(LED transformer)*

G2 - 36"
Under cabinet LED lighting track

$556
MODEL # LEDG2-36-SLV

$1,173
MODEL # LEDG2-36X2-SLV
Set of 2
Includes (1) 24.0" jumper cord

$1,719
MODEL # LEDG2-36X3-SLV
Set of 3
Includes (2) 24.0" jumper cords

Features
25.0"w x 1.0"d x 1.2"h unit size

580 lumens *(with diffuser)*
740 lumens *(without diffuser)*

11.5 watts

3500 K color temperature

85 CRI

50,000 hrs. lamp life

Occupancy sensor sold separately

Continuous dimmer

9.0' power cord

Power source is UL listed

360° rotation

Optical diffuser

Combination wood and magnet mounting hardware

Warranty: 15 yr. *(structural)* /
1 yr. *(LED transformer)*

Occupancy sensor
One occupancy sensor controls every daisy chained G2 light, shutting-off all connected lights simultaneously. When motion is detected, lights resume the last brightness setting

$116
MODEL # G2-OS

Under cabinet lighting

Fluorescent - 24"

Under cabinet lighting track

$201
MODEL # UCL24MAG-BLK

Fluorescent - 48"

Under cabinet lighting track

$244
MODEL # UCL48MAG-BLK

Lucera - 24"

Under cabinet LED lighting track

$320
MODEL # LUCERA-24-SLV

$642
MODEL # LUCERA-24X2-SLV
Set of 2
Includes (1) 24.0" jumper cord

$962
MODEL # LUCERA-24X3-SLV
Set of 3
Includes (2) 24.0" jumper cords

$1,383
MODEL # LUCERA-24X4-SLV
Set of 4
Includes (3) 24.0" jumper cords

Black -BLK	Black -BLK	Silver -SLV
21.7"w x 6.4"d x 1.5"h unit size	35.0"w x 6.4"d x 1.5"h unit size	20.1"w x 0.8"d x 0.5"h unit size
260 lumens	759 lumens	250 lumens
13 watts	39 watts	6 watts
3500 K color temperature	3500 K color temperature	3500 K color temperature
–	–	85 CRI
–	–	50,000 hrs. lamp life
–	–	Occupancy sensor OS-LUCERA **$131**
–	–	Continuous dimmer
9.0' power cord	9.0' power cord	9.0' power cord
Power source is UL listed	Power source is UL listed	Power source is UL listed
–	–	–
–	–	–
Integrated magnet mounting system, spring bars and wood screws	Integrated magnet mounting system, spring bars and wood screws	Combination wood and magnet mounting hardware
Warranty: 15 yr. *(structural)* / 1 yr. *(fluorescent ballast)*	Warranty: 15 yr. *(structural)* / 1 yr. *(fluorescent ballast)*	Warranty: 15 yr. *(structural)* / 1 yr. *(LED transformer)*
		GSA

For more daisy chain configurations, please visit our website or contact our Customer Service Department for details.
Visit our website for additional specs, dimensional drawings, alternative images and more resources for all of ESI's products.

Lucera - 36"

Under cabinet LED lighting track

$440
MODEL # LUCERA-36-SLV

$883
MODEL # LUCERA-36X2-SLV
Set of 2
Includes (1) 24.0" jumper cord

$1,321
MODEL # LUCERA-36X3-SLV
Set of 3
Includes (2) 24.0" jumper cords

$1,860
MODEL # LUCERA-36X4-SLV
Set of 4
Includes (3) 24.0" jumper cords

Silver -SLV

31.7"w x 0.8"d x 0.5"h unit size

420 lumens

10 watts

3500 K color temperature

85 CRI

50,000 hrs. lamp life

Occupancy sensor
LUCERA-OS **$131**

Continuous dimmer

9.0' power cord

Power source is UL listed

–

–

Combination wood and magnet mounting hardware

Warranty: 15 yr. *(structural)* / 1 yr. *(LED transformer)*

GSA

G2 - 24"

Under cabinet LED lighting track

$451
MODEL # LEDG2-24-SLV

$897
MODEL # LEDG2-24X2-SLV
Set of 2
Includes (1) 24.0" jumper cord

$1,400
MODEL # LEDG2-24X3-SLV
Set of 3
Includes (2) 24.0" jumper cords

$1,758
MODEL # LEDG2-24X4-SLV
Set of 4
Includes (3) 24.0" jumper cords

Silver -SLV

20.0"w x 1.0"d x 1.2"h unit size

430 lumens *(with diffuser)*
550 lumens *(without diffuser)*

8.5 watts

3500 K color temperature

85 CRI

50,000 hrs. lamp life

Occupancy sensor
G2-OS **$116**

Continuous dimmer

9.0' power cord

Power source is UL listed

360° rotation

Optical diffuser

Combination wood and magnet mounting hardware

Warranty: 15 yr. *(structural)* / 1 yr. *(LED transformer)*

GSA

G2 - 36"

Under cabinet LED lighting track

$556
MODEL # LEDG2-36-SLV

$1,173
MODEL # LEDG2-36X2-SLV
Set of 2
Includes (1) 24.0" jumper cord

$1,719
MODEL # LEDG2-36X3-SLV
Set of 3
Includes (2) 24.0" jumper cords

Silver -SLV

25.0"w x 1.0"d x 1.2"h unit size

580 lumens *(with diffuser)*
740 lumens *(without diffuser)*

11.5 watts

3500 K color temperature

85 CRI

50,000 hrs. lamp life

Occupancy sensor
G2-OS **$116**

Continuous dimmer

9.0' power cord

Power source is UL listed

360° rotation

Optical diffuser

Combination wood and magnet mounting hardware

Warranty: 15 yr. *(structural)* / 1 yr. *(LED transformer)*

GSA

Wall-mounted work gear

Get your office in gear

Deliver work gear in limited spaces with wall-mounted solutions. Ideal for multiple users in community spaces, wall mounted work gear increases efficiency, productivity, and collaboration. Amplify your team's productivity with gear tailored for your space.

Product shown: Titan2-Edge

Titan track series

Titan-Edge
Single track-mounted workstation

$1,254
MODEL # TITAN-EDGE

Keyboard arm and monitor arm can be positioned anywhere along the wall track
For left or right-handed users
Keyboard tray folds up or down to save space
Edge® monitor arm (pg. 20)
(1) One 31.5" aluminum alloy wall track
6.5 lbs.–17.6 lbs. monitor weight range
12.5" monitor arm height adjustment range
22.5" monitor arm extension
24.9"w x 10.6"d keyboard platform
23.0" keyboard arm extension
Includes track covers to conceal cords
Warranty: 2 yr. *(palm rest)*
15 yr. *(all other components)*

Mini CPU holder
Specifically for Titan-Edge

$103
MODEL # PAC-CPUMINI

3.3"–6.0" adjustable width
55 lbs. load capacity
Fits CPUs 5.0"–20.0" in overall height
Compatible only with the Titan-Edge
Warranty: 15 yr.

Titan2-Edge
Dual track-mounted workstation

$1,452
MODEL # TITAN2-EDGE

Keyboard arm and monitor arm can be positioned anywhere along the wall track
For left or right-handed users
Keyboard tray folds up or down to save space
Edge® monitor arm (pg. 20)
(2) Two 31.5" aluminum alloy wall tracks (63.0" total)
Mini CPU holder (PAC-CPUMINI)
6.5 lbs.–17.6 lbs. monitor weight range
12.5" monitor arm height adjustment range
22.5" monitor arm extension
24.9"w x 10.6"d keyboard platform
23.0" keyboard arm extension
Includes track covers to conceal cords
Warranty: 2 yr. *(palm rest)*
15 yr. *(all other components)*

Locking CPU holder
Specifically for Titan-Edge

$458
MODEL # PAC-CPULOCK **LT**

3.5"–9.3" adjustable width
12.5"–22.5" adjustable height
85 lbs. load capacity
Heavy duty knob with special hex key
Compatible only with the Titan-Edge
Warranty: 15 yr.

Mobile work gear

Work gear on wheels

Built-in wheels make this convenient equipment portable and easy to move so you can keep technology accessible for an efficient work environment.

Product shown: WOW01, Titan2-Edge

WOW series

WOW
Complete workstation-on-wheels

$1,466
MODEL # WOW

Pneumatic lift platform with wire controller

5-star base with heavy-duty casters *(2 locking)*

Includes cable management system

13.0" height adjustment for platform
28.0"–41.0" (low/high)

26.5"w x 22.5"d platform measurement

28.0" diameter base measurement

20 lbs. weight capacity *(including surface)*

Platform with palm rest

Fixed monitor mount

CPU holder
- 13.0"–21.0" adjustable height
- 2.5"–8.3" adjustable width
- 50 lbs. capacity

Warranty: 2 yr. *(palm rest)*
15 yr. *(all other components)*

CPU holder
Specifically for workstation-on-wheels

$248
MODEL # WOW-CPU

Adjustable CPU holder for WOW

Non-porous foam material prevents CPU damage

Can be cleaned and sanitized to maintain a germ-free environment

50 lbs. capacity

13.0"–21.0" adjustable height

2.5"–8.3" adjustable width

Compatible only with the WOW/WOW01

Warranty: 15 yr.

WOW01
Base model workstation-on-wheels

$949
MODEL # WOW01

Pneumatic lift platform with wire controller

5-star base with heavy-duty casters *(2 locking)*

Includes cable management system

13.0" height adjustment for platform
28.0"–41.0" (low/high)

26.5"w x 22.5"d platform measurement

28.0" diameter base measurement

20 lbs. weight capacity *(including surface)*

Additional accessories available

Warranty: 15 yr.

Monitor mount
Fixed height monitor arm for workstation-on-wheels

$207
MODEL # WOW-MR

+90°/-25° monitor tilt

90° portrait/landscape adjustment

90° side-to-side rotation

Compatible only with the WOW/WOW01

Warranty: 15 yr.

Mobile accessories

Utility cart

Rolling platform cart

$212

MODEL # ACPC-1-BLK

18.8"d x 15.0"w platform

150 lbs. load capacity

For printers, shredders, and other office machines

Includes non-slip pads

(4) Four swivel caster wheels *(2 locking)*

Warranty: 15 yr.

Mobile cart

Mobile CPU holder

$153

MODEL # CPUCART-1-BLK

160 lbs. load capacity

Fits CPU's ranging from 3.8"–9.0" wide

CPU sits in adjustable tray

(4) Four swivel caster wheels *(2 locking)*

Easy to assemble; no tools required to make adjustments

Warranty: 15 yr.

Level certified products

Monitor arms

PRODUCT NAME	LEVEL	PAGE
Edge	2	20
Edge2	2	21
Edge2-MS	2	22
Edge2-Max	2	23
Edge-Max	2	24
Edge-Max-Dual	2	25
Edge-Wall	2	26
Edge-Slat	2	27
Evolve-Stubby	2	32
Evolve1-F	2	32
Evolve1-FF	2	33
Evolve1-FM	2	33
Evolve1-M	2	34
Evolve2-FF	2	36
Evolve2-FM	2	37
Evolve2-FS	2	37
Evolve2-FMS	2	38
Evolve2-MS	2	39
Evolve3-FF	2	40
Evolve3-FMS	2	41
Evolve4-FF	2	42
Evolve4-FM	2	42
Evolve4-MS	2	43
Evolve4-FMS	2	43
Evolve6-FF	2	44
Evolve6-FMS	2	45
Kata	2	56
Kata2	2	57
Kata2-MS	2	58

Monitor arm accessories

PRODUCT NAME	LEVEL	PAGE
Slider mount	2	60
VESA mount	2	60
Weighted VESA mount	2	60

Height adjustable tables & accessories

PRODUCT NAME	LEVEL	PAGE
All-Flex	2	76,78
Conceal	1	100
CPU mini	2	100
CPU05	2	100
Pencil drawer	2	100
PAC-CPUMINI	2	139
PAC-CPULock	2	139

Desktop sit-to-stand workstations

PRODUCT NAME	LEVEL	PAGE
Climb	2	104
Climb2	2	105

Articulating arms

PRODUCT NAME	LEVEL	PAGE
AA330	2	122
AA360	2	122
AA100-PTLO	2	123
AA370	2	123
AA750DAT	2	123
AA355DS	2	124
AA780DAT	2	124

Wall-mounted work gear

PRODUCT NAME	LEVEL	PAGE
Titan-Edge	2	139
Titan2-Edge	2	139

Mobile work gear

PRODUCT NAME	LEVEL	PAGE
WOW01	2	141
Mobile CPU cart	2	100, 142
Utility cart	2	101, 142

Terms and conditions

For the most up-to-date product and ordering information, refer to the ESI website at esiergo.com.

Acceptance by Customer of delivery of products from ESI ("Products") constitutes acceptance by Customer of these terms and conditions ("Terms and Conditions"). Any additional or different terms proposed by Customer shall be deemed to have been objected to by ESI, shall be of no force or effect, and shall not be binding upon or enforceable against ESI. These Terms and Conditions constitute the entire agreement and understanding between the parties and supersede any and all prior agreements, understandings and communications with Customer, oral or written, relating to the Products. No course of dealing or course of performance, either prior to, during or after the delivery of the Products, shall be relevant or admissible by Customer to supplement, explain or vary these Terms and Conditions. The invalidity or unenforceability of any Terms and Conditions shall not affect the validity or enforceability of any other term or condition, and the remaining terms and conditions shall remain in full force and effect. No waiver, amendment or modification of these Terms and Conditions shall be binding upon or enforceable against Seller until approved in writing by an ESI Authorized Signatory.

Government Terms and Conditions vary from these Terms and Conditions. Contact our Customer Service Department or visit esiergo.com for terms applicable to government purchases.

Discontinued products
Due to changing market demands, ESI periodically may discontinue certain products. ESI reserves the right to change and/or discontinue products at any time without notice.

Payment and credit terms
To establish an account, Customer must complete and submit ESI's New Account Application (signed by company officer), Federal Taxpayer ID (Form W-9) and State Resale Certificate. Once credit is approved, payment terms are net 30 days. Prior to Customer's credit approval (with receipt of required documents), prepayment of orders may be made by corporate check, or for convenience, credit cards (Visa, Mastercard and American Express) are accepted.

Past Due Accounts: Open orders or pending shipments will be held until the account is brought current. ESI reserves the right to amend account terms, at any time, based on account history. Contact ESI's Accounting Department for details.

Deposits: Subject to sales, credit history, and credit lines, a deposit may be required to process large orders.

Purchase order submission
Purchase Orders (POs) should be submitted via e-mail to orders@esiergo.com. POs should include "Ship To" and "Bill To" information along with complete ESI product model numbers and Customer cost. Government orders require a copy of the agency PO at the time the order is placed with ESI. All POs shall be subject to written acceptance by an authorized representative of ESI. Incomplete POs or changes will delay processing and shipment until receipt of all necessary information and ESI's issuance of revised Sales Order Acknowledgment.

Order changes or cancellations
All Customer cancellations and changes must be submitted to ESI in writing to orders@esiergo.com. Order changes include the addition/deletion of line items or changes in quantity or requested Ship Date or Ship To address. Order changes that result in a quantity reduction may be subject to an adjustment in pricing. Change or cancellation requests are not considered accepted until ESI provides a revised Sales Order Acknowledgment. Changes may result in processing delays or shipping delays. Under no circumstances will changes or cancellations be accepted on any special order, custom product, or worksurface order without the express written consent of ESI. All such custom and special orders are non-returnable.

Taxes
ESI is not responsible for the collection of sales tax on products sold to dealers. Dealers must provide Federal Taxpayer ID (Form W-9) and State Resale Certificate to establish an account with ESI. Dealers are responsible for any sales or use taxes assessed if dealer requests that ESI drop-ship direct to dealer's customer.

Pricing and specifications
ESI reserves the right to revise all pricing, discounts, and freight terms, at any time, without notice. Current product pricing is included on product pages at esiergo.com. Prices which are in effect at the time of order shall apply. All prices shown are list price. All prices in the catalog are effective January 28, 2019, and are list price. All measurements are accurate within 0.25". Visit ESI's website esiergo.com for the most up-to-date product and ordering information, as well as additional specs, dimensional drawings, alternative images and more resources. All prices shown are in U.S. dollars. Contact our Customer Service Department for a current Canadian Foreign Exchange Conversion Rate.

Shipping

48 hour ship program

ESI offers 48 hour shipping on the majority of products. Unless otherwise requested, these products are shipped from Phoenix, Arizona, within two business days of receiving the PO, depending on quantity ordered and available inventory. Orders that include products with longer lead times including special orders, custom products, or worksurface orders, are designated as "LT" (lead time) and therefore not included in the 48 hour ship program. Large orders may also require additional lead time. Products designated as LT could take up to 90 days ARO for delivery. Call for on-hand availability.

Please note:

1. For the order to qualify for 48 hour shipping, all products on the PO must be available under the 48 hour ship program.
2. POs that include LT designated products will be shipped based on the lead time of the LT designated products unless otherwise requested.
3. 48 hour orders will be shipped out within two business days unless otherwise specified on the PO.

Freight terms

ESI ships orders by way of standard ground carrier service dock-to-dock within the contiguous 48 states. Special requests such as “call before delivery”, “delivery lift gate required”, residential delivery, re-routed deliveries, or specific delivery date/time requests may be subject to additional charges or may not be available. Contact our Customer Service Department for expedited delivery requests or deliveries outside of the contiguous 48 states.

Customers will be charged additional fees for changes made to orders that have already departed the facility, resulting in re delivery or re consignment.

ESI accepts requests for expedited freight at the customer’s expense. Please contact our Customer Service Department at 800.833.3746 and provide your preferred carrier account number in which to charge the expedited freight.

Worksurfaces may be drop shipped from a separate location and may arrive on a date different than the other items on the order.

Orders of $250 list or more, ship free freight. A $25 flat shipping fee will be incurred for orders under $250 list.

Handling & special services

Cutting fee - A fee of $40 list will be assessed per unit for all custom cutting requests.

Will call

ESI offers will call pickup at the Mesa, Arizona facility. Will call pickups are available Monday through Friday from 7am to 3pm. Requests for will call must be included in PO. Will call orders will be invoiced on the date requested for pickup.**Will call**
ESI offers will call pickup at the Mesa, Arizona facility. Will call pickups are available Monday through Friday from 7am to 3pm. Requests for will call must be included in PO. Will call orders will be invoiced on the date requested for pickup.

Damage/shortage claims

ESI packages products to reduce the risk of damage during shipment. ESI verifies order quantity and weight with the carrier before any shipments are made. When receiving an order, first confirm the quantity of cartons delivered with carrier’s quantity and inspect cartons for signs of damage. The customer must notify carrier of damages or shortages at the time of delivery, or claims will not be accepted. Do not sign for the shipment until it is verified. Signing a freight bill without any notation relieves the carrier of any responsibility and serves as your acknowledgment to ESI that shipment was received in full. Discrepancies or concealed damage found upon opening the shipment must be reported to ESI in writing within five (5) business days of delivery or Customer waives right to submit a claim. Damaged products must not be removed from point of delivery and must remain in original packaging for inspection by the carrier. ESI is not responsible for damage or discrepancies occurring after delivery. ESI reserves the right to request a return of damaged or defective products.

Returns

Contact ESI Customer Service by e-mail at customerservice@esiergo.com or phone 800.833.3746 to request a Return Authorization (RA) form. Please have the original PO number or ESI order number available. Request for product returns must be made to ESI within 60 days of the date shipped. Products, along with a copy of the RA, must be received at ESI’s Warehouse within 30 days of the date of the RA issuance

Terms and conditions

to be eligible for credit. Products received after this date will not receive a credit. Custom products, products not listed in catalog or on esiergo.com, and worksurfaces are non-returnable. Package(s) should be sent to:

ESI
ATTN: Returns Department
4030 East Quenton Drive, Suite 101
Mesa, AZ 85215

- Products returned to ESI without having been issued an RA or those not meeting the return requirements will not be eligible for a credit.
- A re-stocking fee of 30% will apply to all non-warranty returns.
- To protect your return against loss, ESI recommends choosing a carrier that will provide tracking information and the ability to insure the shipment.
- Products which have been fully or partially assembled are not returnable for credit.
- Products must be returned in undamaged, re-sellable condition and in original packaging.
- Products should be carefully repacked to avoid damage during return shipping. Claims for product damaged on the return shipment are the responsibility of the Customer.
- The Customer is responsible for freight charges associated with returns.

Upon receipt, the product will be inspected to ensure it meets ESI's return guidelines. Once approved, Customer's account will be credited appropriately. No credit will be issued for unauthorized product returns or those not meeting return guidelines. Do not make any adjustments to your account until receipt of ESI Credit Memo. Costs associated with installation, return shipping, etc. of returned products will not be reimbursed. Please allow up to 30 days for returns processing.

Warranty

ESI grants a limited warranty to the end-users of its Products, the terms of which are included with each Product. Customer's remedies set forth herein are exclusive and the liability of ESI with respect to the breach of the Agreement or these Terms and Conditions shall not exceed the price of the Product or part on which such liability is based. IN NO EVENT SHALL ESI BE LIABLE TO CUSTOMER FOR ANY INCIDENTAL, CONSEQUENTIAL, INDIRECT, STATUTORY, SPECIAL, EXEMPLARY, OR PUNITIVE DAMAGES, INCLUDING, BUT NOT LIMITED TO, LOST PROFITS, LOSS OF USE, LOSS OF TIME, INCONVENIENCE, LOSS BUSINESS OPPORTUNITIES, DAMAGE TO GOOD WILL OR REPUTATION, OR LOSS OF DATA, ARISING OUT OF, OR AS A RESULT OF, THE SALE, DELIVERY, SERVICING, USE OR LOSS OF THE PRODUCTS SOLD HEREUNDER, REGARDLESS OF WHETHER SUCH LIABILITY IS BASED ON BREACH OF CONTRACT, TORT, STRICT LIABILITY OR OTHERWISE, AND EVEN IF ADVISED OF THE POSSIBILITY OF SUCH DAMAGES OR SUCH DAMAGES COULD HAVE BEEN REASONABLY FORESEEN. Correction of any nonconformity in the manner and for the period provided shall constitute complete fulfillment of all liabilities of ESI, with respect to or arising out of the Product furnished hereunder. No claim by Customer of any kind including, but not limited to, claims for indemnification, whether as to quality or amount of Product delivered or non-delivery, shall be greater in amount then the purchase price for the Products in respect of which damages are claimed.

THIS LIMITED WARRANTY IS IN LIEU OF ALL OTHER REPRESENTATIONS, WARRANTIES OR CONDITIONS, EXPRESS OR IMPLIED, AND ESI MAKES NO OTHER WARRANTIES OR REPRESENTATIONS TO CUSTOMER OR ANY OTHER PERSON OF ANY KIND, WHETHER EXPRESS OR IMPLIED, WITH RESPECT TO THE PRODUCTS, AND ESI SPECIFICALLY DISCLAIMS ALL IMPLIED REPRESENTATIONS, WARRANTIES OR CONDITIONS, WITHOUT LIMITATION, INCLUDING, BUT NOT LIMITED TO, THE IMPLIED WARRANTIES OF MERCHANTABILITY, FITNESS FOR A PARTICULAR PURPOSE, NON-INFRINGEMENT, NON-INTERFERENCE, AND ALL OTHER WARRANTIES ARISING FROM COURSE OF DEALING OR USAGE OF TRADE. PRODUCTS SOLD HEREUNDER ARE SOLD ONLY TO THE SPECIFICATIONS SPECIFICALLY SET FORTH BY ESI IN WRITING. ESI'S SOLE OBLIGATION FOR A REMEDY TO CUSTOMER SHALL BE REPAIR OR REPLACEMENT OF NON-CONFORMING PRODUCTS, AS SET FORTH ABOVE. CUSTOMER ASSUMES ALL RISK WHATSOEVER AS TO THE RESULT OF THE USE OF PRODUCTS PURCHASED, WHETHER USED ALONE OR IN COMBINATION WITH OTHER PRODUCTS OR SUBSTANCES.

All ESI products are covered under a 15 year warranty, except the components and products listed below:

10 years: Eppa™ series monitor arm
7 years: Electric table components and motors; Crank mechanisms; Counterbalance mechanisms; Railway™ series (electrical); Centro™
5 years: Laminated worksurfaces; S2S; Birdi™ foam and cylinder
3 years: Climb series, Birdi™ fabrics
2 years: Palm rests; Mouse pads
1 year: Pencil drawers; Fluorescent ballasts; LED transformers; FlexCharge™ series

Intellectual property
Customer acknowledges that ESI is the owner of intellectual property related to certain Products, including the registered trademarks and other trademarks (the "Marks") and proprietary designs and patterns, patents and/or pending patent applications, if any, used in connection with its Products (collectively, "Intellectual Property"). Customer shall not use the Marks or any part thereof as part of Customer's name, nor register any name, including domain names, or mark confusingly similar to the Marks. Customer acknowledges that it is not being licensed any right or interest of any kind in the Marks and that Customer may not use same without the prior, written consent of ESI. ESI reserves the right to discontinue deliveries of any products, the manufacture, sale or use of which would, in ESI's opinion, infringe upon any U.S. patent, trademark or design now or hereinafter issued, registered, or existing and under which ESI is not licensed.

Relationship of parties
The relationship of the Parties hereto is that of vendor and purchaser. Nothing in these Terms and Conditions, and no course of dealing between the Parties, shall be construed to create any other type of relationship. Accordingly, Customer shall not be empowered to bind ESI in any way, to incur any liability or otherwise act on behalf of ESI.

Governing law
These Terms and Conditions shall be governed by the laws of the State of Illinois, without giving effect to the principles of conflicts of law of such state, and shall be binding upon the Parties hereto in the United States and worldwide.

ESI and Customer agree that any legal action arising out of or relating to this agreement or the transactions contemplated by this agreement shall be brought in either the United States District Court in and for the Eastern Division of the Northern District of Illinois or the Circuit Court in and for DuPage County, Illinois, and consents to personal jurisdiction of such courts over them in any such action. Customer waives any defense or inconvenient forum to the maintenance of any such action or proceeding so brought and waives any bond, surety, or other security that might be required of ESI.

Severability
If any clause or portion of these Terms and Conditions shall be held by a court of competent jurisdiction to be illegal, invalid, or unenforceable, the remaining clauses or portions shall remain in full force and effect.

Force majeure
Neither Party shall be liable hereunder for any failure or delay in the performance of its obligations under these Terms and Conditions, except for the payment of money, if such failure or delay is on account of causes beyond its control, including labor disputes, civil commotion, war, fires, floods, inclement weather, governmental regulations or controls, casualty, government authority, strikes, or acts of God, in which event the non-performing Party shall be excused from its obligations for the period of the delay and for a reasonable time thereafter. Each Party shall use reasonable efforts to notify the other Party of the occurrence of such an event within five (5) business days of its occurrence.

ESI Office and Showroom

4030 East Quenton Drive
Mesa, Arizona 85215

Fellowes Brands® Headquarters

1789 Norwood Avenue
Itasca, Illinois 60143

Chicago Showroom

theMart
Showroom 11-101
222 West Merchandise Mart Plaza
Chicago, Illinois 60654

Denver Showroom

1825 Lawrence Street
Suite 111
Denver, CO 80202

esi

work gear

January 2019 Catalog | Volume 31

© 2019 Fellowes, Inc.